SOLDER SUFFIX	CUSTOMER TERMINAL	RoHS	LEAD(Pb)–FREE
LF1	Sn96%, Ag4%	Yes	No

compliant RoHS WE–MIDCOM

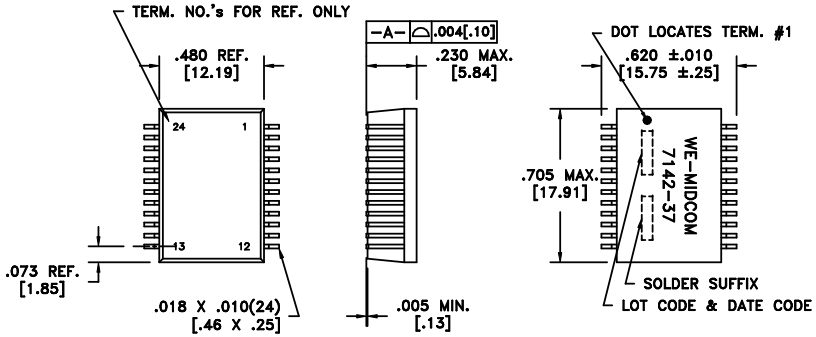

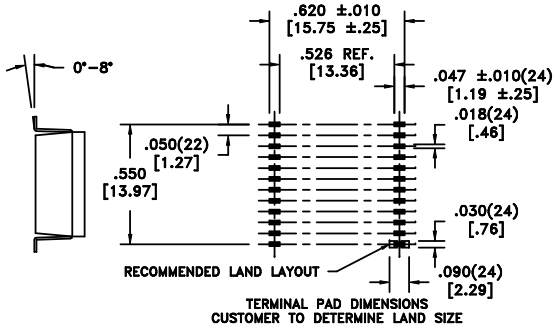

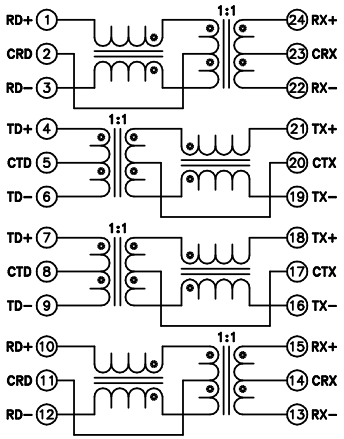

ELECTRICAL SPECIFICATIONS @ 25°C unless otherwise noted:

PARAMETER		TEST CONDITIONS	VALUE
INDUCTANCE	24–22	100kHz, 100mVAC, 8mADC, Lp	350uH min.
INDUCTANCE	21–19	100kHz, 100mVAC, 8mADC, Lp	350uH min.
INDUCTANCE	18–16	100kHz, 100mVAC, 8mADC, Lp	350uH min.
INDUCTANCE	15–13	100kHz, 100mVAC, 8mADC, Lp	350uH min.
DIELECTRIC	1–24	tie(1+4+7+10, 24+21+18+15), 1800Vrms, 1 second	1500Vrms, 1 minute
TURNS RATIO		(1–3):(24–22)	1:1, ±2%
TURNS RATIO		(4–6):(21–19)	1:1, ±2%
TURNS RATIO		(7–9):(18–16)	1:1, ±2%
TURNS RATIO		(10–12):(15–13)	1:1, ±2%
INSERTION LOSS		1M – 100MHz	–1.1dB max.
RETURN LOSS		1M – 30MHz	–18dB min.
RETURN LOSS		30M – 45MHz	–16dB min.
RETURN LOSS		45M – 60MHz	–14dB min.
RETURN LOSS		60M – 80MHz	–12dB min.
CROSSTALK		1M – 100MHz	–35dB min.
CMRR		1M – 100MHz	–35dB min.

GENERAL SPECIFICATIONS:
OPERATING TEMPERATURE RANGE: 0°C to +70°C.

COPLANARITY: All 16 terminals must lie on a plane within .004 [.10] of Surface A after lead tinning.

REV.	DATE
6A	10/07

AGENCY	NUMBER
UL60950	E205930
CSA60950 (Via CUL)	E205930

Packaging Specifications
Method: Tape & Reel
PKG–0363
www.midcom–inc.com

Unless otherwise specified:
Tolerances: Fractions: ±1/64
Angles: ±1° Decimals: ±.005[.127]
This drawing is dual dimensioned. Dimensions in brackets are in millimeters.

DRAWING TITLE
TRANSFORMER
PDFP–G24
eiSos p/n: 749010022

Midcom–WE
www.midcom–inc.com
REVISIONS: SEE SHEET 1

DRAWING NO.
000-7142-37R-LF1
SCALE ––– SHEET 2 OF 8

Downloaded from Datasheet.su