TA Series

Power Chip®
Thick Film on Alumina Substrate

RoHS Compliant

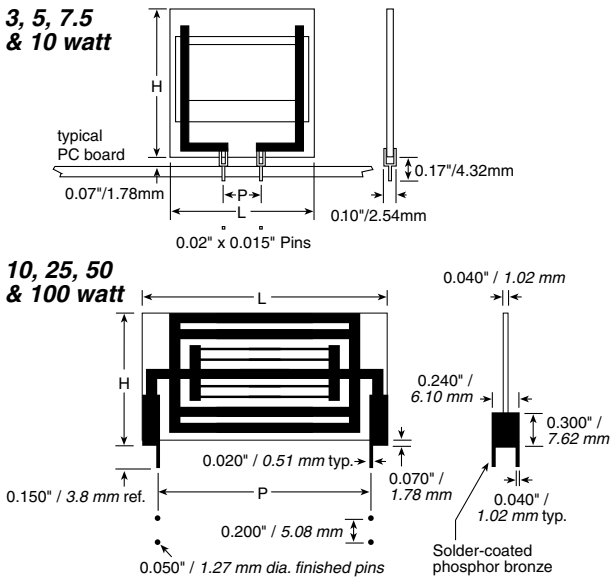

Series	Wattage	Dimensions (±.020 in. / ±.508mm) P	Length L	Height H
TA203	3.0	0.200 / *5.08*	0.50 / *12.70*	0.60 / *15.24*
TA303	3.0	0.300 / *7.62*	0.50 / *12.70*	0.60 / *15.24*
TA205	5.0	0.200 / *5.08*	0.50 / *12.70*	1.00 / *25.40*
TA305	5.0	0.300 / *7.62*	0.50 / *12.70*	1.00 / *25.40*
TA605	5.0	0.600 / *15.24*	1.00 / *25.40*	0.50 / *12.70*
TA805	5.0	0.800 / *20.32*	1.00 / *25.40*	0.50 / *12.70*
TA207	7.5	0.200 / *5.08*	0.75 / *19.05*	1.00 / *25.40*
TA307	7.5	0.300 / *7.62*	0.75 / *19.05*	1.00 / *25.40*
TA310	10.0	0.300 / *7.62*	1.00 / *25.40*	1.00 / *25.40*
TA810	10.0	0.800 / *20.32*	1.00 / *25.40*	1.00 / *25.40*
TA025	25.0	1.90 / *48.3*	2.220 / *56.39*	1.170 / *29.70*
TA050	50.0	1.90 / *48.3*	2.220 / *56.39*	2.270 / *57.60*
TA100	100.0	4.10 / *104.1*	4.420 / *112.27*	2.270 / *57.60*

Ohmite's original Power Chip resistors feature our thick film on alumina substrate technology. These planar packages yield space saving, 10W/in^2 power densities that require over 50% less board space than other radial packages. Convection cooling is maximized by the planar package configuration which dissipates heat well above board level.

Ohmite's power chip resistors have a 125% higher operating temperature range than competitive product of similar design. High temperature solder and in-process plating keep terminations secure under self-heating effects by preventing re-flow from full power operation.

Flexible packaging schemes make these resistors ideal for power supplies, audio amplifiers, video fly-back, and other power control applications.

FEATURES

- High-Temp Terminal Construction
- Wide Resistance Range
- Low Inductance (50nH-100nH)
- High Power Density
- Easy to install. PC-mountable

SPECIFICATIONS

Material
Substrate: Alumina
Resistor: Thick Film
Coating: Glass
Terminals: Solder Plated Phosphor Bronze
Thermal Conductivity: 20 Watts/Meter/°C
Temperature Coefficient:

1 ohm	450 ppm/°C
1 to 100Ω	100 ppm/°C
101Ω and up	50 ppm/°C

Electrical
Tolerance: ±1%, ±5% and ±10%
Power Rating: Based on 25°C free air
Resistance Range: 0.25 ohm to 10M ohm. Consult factory for other values
Maximum Operating Voltage: 350 VAC, 500 VDC through glass, 1000 VAC, 1500 VDC through substrate
Overload: Five times rated power, as long as the one second average dissipation does not exceed the wattage rating. ΔR: ±2%, 2000 hours
Derating: 100% @ 25°C to 0% @ 180°C ambient.

ORDERING INFORMATION

Pin spacing *(on 3-10W models only)*: 2 = .2", 3 = .3", 8 = .8"
Tolerance: K = 10%, J = 5%, F = 1%
RoHS compliant

TA 3 05 PA 4K50 J E

Series
Power Rating: 03 = 3 W, 05 = 5, 07 = 7.5, 10 = 10, 025 = 25, 050 = 50, 100 = 100
Package: PA = pin terminals, std. for 3-10 W; PW = wraparound, std. for 10-100 W
Resistance Value (Ω): R250 = 0.25, 10R0 = 10.0, 2K00 = 2,000, 45K0 = 45,000

Check product availability at **www.ohmite.com**

STANDARD PART NUMBERS FOR TA SERIES

Ohmic value	Part No. (Prefix ➤ / Suffix ▼)	TA203PA	TA303PA	TA205PA	TA305PA	TA207PA	TA310PA	TA810PW	TA025PW	TA050PW	TA100PW
0.25	R250J	✚	✔	✔	✔						
1.00	1R00J	✚	✚	✚	✔	✔	✚	✚	✚	✚	✚
1.50	1R50J	✔	✔	✔	✔	✔	✚	✔	✔	✔	✔
2.00	2R00J	✚	✔	✚	✔	✔	✚	✔	✔	✔	✔
4.70	4R70J	✔	✔	✚	✚	✔	✔	✔	✔	✔	✔
5.00	5R00J	✚	✔	✔	✔	✔	✔	✚	✚	✚	✚
5.10	5R10J	✔	✔	✔	✔	✚	✔	✔	✔	✔	✔
7.50	7R50J	✔	✔	✔	✔	✔	✚	✔	✔	✔	✔
8.20	8R20J	✔	✔	✔	✚	✔	✔	✔	✔	✔	✔
10.00	10R0J	✚	✚	✚	✚	✚	✚	✚	✚	✚	✚
11.00	11R0J	✔	✔	✚	✔	✔	✔	✔	✔	✔	✔
12.00	12R0J	✚	✔	✔	✔	✔	✔	✔	✔	✔	✔
15.00	15R0J	✚	✔	✔	✚	✔	✔	✔	✔	✔	✔
20.00	20R0J	✚	✔	✚	✚	✚	✚	✔	✔	✔	✔
24.00	24R0J	✔	✔	✔	✚	✔	✔	✔	✔	✔	✔
27.00	27R0J	✚	✔	✔	✔	✔	✚	✔	✔	✔	✔
33.00	33R0J	✔	✔	✔	✔	✚	✔	✔	✔	✔	✔
47.00	47R0J	✚	✔	✚	✔	✔	✔	✔	✔	✔	✔

Ohmic value	Part No. (Prefix ➤ / Suffix ▼)	TA203PA	TA303PA	TA205PA	TA305PA	TA207PA	TA310PA	TA810PW	TA025PW	TA050PW	TA100PW
50.00	50R0J	✚	✚	✚	✚	✔	✔	✚	✚	✚	✚
62.00	62R0J	✔	✔	✔	✚	✔	✔	✔	✔	✔	✔
68.00	68R0J	✔	✔	✚	✔	✔	✚	✔	✔	✔	✔
75.00	75R0J	✔	✔	✔	✚	✔	✔	✔	✔	✔	✔
100.00	100RJ	✚	✔	✚	✚	✔	✚	✚	✚	✚	✚
150.00	150RJ	✔	✔	✚	✔	✔	✔	✔	✔	✔	✔
200.00	200RJ	✚	✚	✚	✚	✚	✔	✔	✔	✔	✔
250.00	250RJ	✔	✔	✔	✚	✔	✔	✔	✔	✔	✔
270.00	270RJ	✔	✔	✚	✔	✔	✚	✔	✔	✔	✔
300.00	300RJ	✚	✔	✚	✔	✔	✔	✔	✔	✔	✔
470.00	470RJ	✚	✔	✚	✔	✚	✚	✔	✔	✔	✔
500.00	560	✚	✔	✚	✔	✔	✔	✚	✚	✚	✚
620.00	620RJ	✔	✔	✔	✚	✔	✔	✔	✔	✔	✔
680.00	680RJ	✔	✔	✚	✔	✔	✔	✔	✔	✔	✔
1,000.00	1K00J	✚	✔	✚	✔	✔	✚	✚	✚	✚	✚
1,500.00	1K50J	✔	✔	✚	✚	✔	✚	✔	✔	✔	✔
1,800.00	1K80J	✔	✔	✚	✔	✔	✔	✔	✔	✔	✔
2,000.00	2K00J	✚	✔	✔	✚	✔	✔	✔	✔	✔	✔

Ohmic value	Part No. (Prefix ➤ / Suffix ▼)	TA203PA	TA303PA	TA205PA	TA305PA	TA207PA	TA310PA	TA810PW	TA025PW	TA050PW	TA100PW
2,500.00	2K50J	✔	✔	✚	✔	✔	✔	✔	✔	✔	✔
3,000.00	3K00J	✔	✔	✚	✔	✔	✚	✔	✔	✔	✔
4,000.00	4K00J	✔	✔	✔	✚	✔	✔	✔	✔	✔	✔
4,700.00	4K70J	✔	✔	✚	✚	✚	✔	✔	✔	✔	✔
5,000.00	5K00J	✔	✔	✔	✚	✔	✔	✔	✔	✔	✔
5,100.00	5K10J	✔	✔	✚	✔	✔	✚	✔	✔	✔	✔
7,500.00	7K50J	✔	✔	✚	✔	✔	✚	✔	✔	✔	✔
10,000.00	10K0J	✚	✔	✚	✚	✚	✚	✚	✚	✔	✔
15,000.00	15K0J	✔	✔	✔	✚	✔	✔	✔	✔	✔	✔
18,000.00	18K0J	✔	✚	✔	✚	✔	✔	✔	✔	✔	✔
20,000.00	20K0J	✔	✔	✚	✔	✚	✚	✔	✔	✔	✔
30,000.00	30K0J	✔	✔	✚	✔	✔	✔	✔	✔	✔	✔
39,000.00	39K0J	✔	✔	✔	✚	✔	✔	✔	✔	✔	✔
50,000.00	50K0J	✔	✔	✔	✚	✔	✔	✔	✔	✔	✔
75,000.00	–75K0J	✔	✔	✚	✔	✔	✔	✔	✔	✔	✔
100,000	100KJ	✚	✚	✚	✔	✔	✔	✔	✔	✔	✔
150,000	150KJ	✚	✔	✔	✔	✔	✔	✔	✔	✔	✔
200,000	200KJ	✔	✚	✔	✔	✔	✔	✔	✔	✔	✔

✚ = Most popular standard values, ✔ = Stock values, ✜ = Non-standard values subject to minimum handling charge per item

Downloaded from Datasheet.su