Art.-Number: 701724

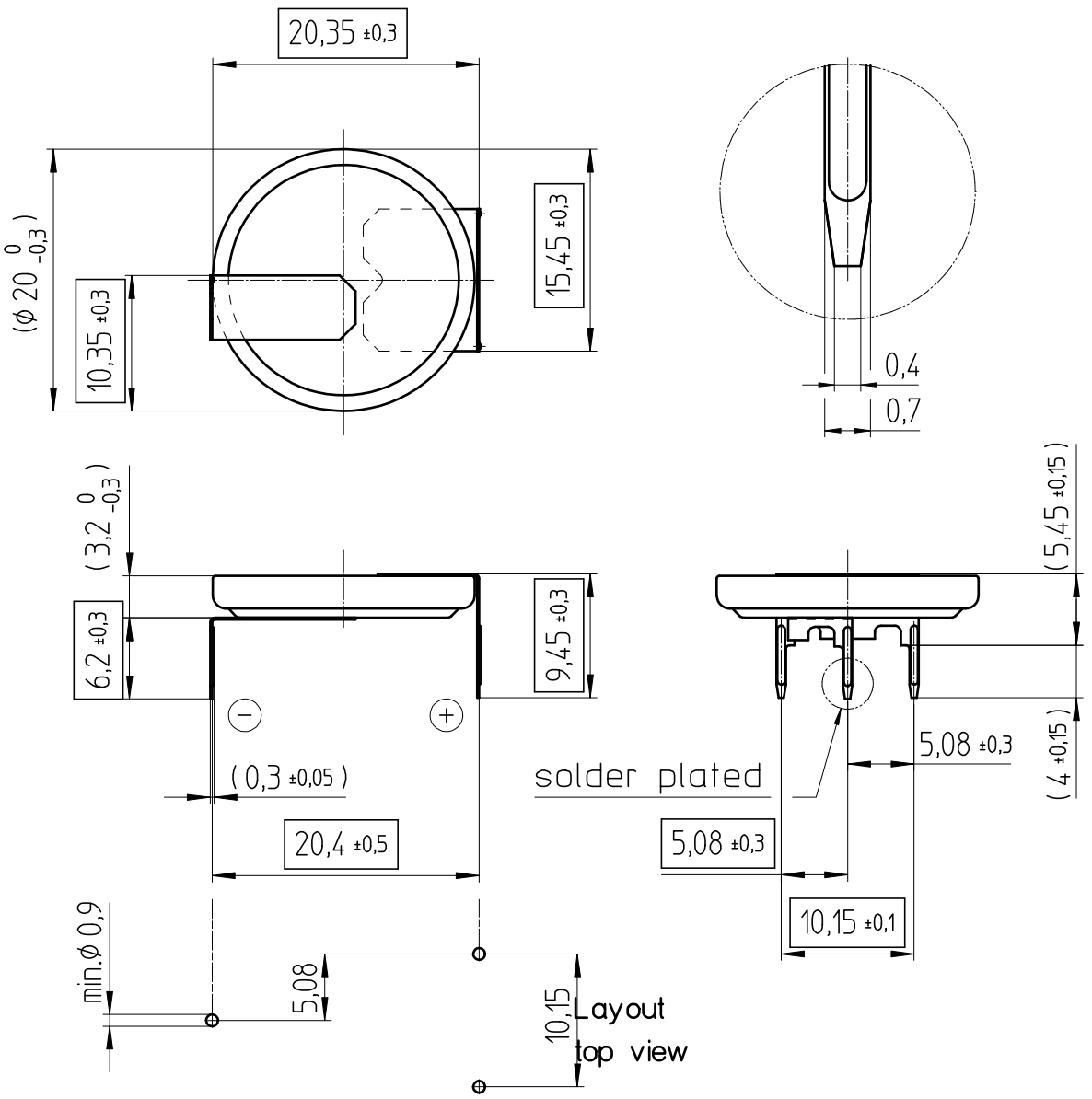

- Samples can deviate in the execution from the serie.

- Dimensions and tolerances can be specified only after the testing of the devices for the mass production definitely

Tab material: Stainless steel

All framed values will be used for dimension checking !

Rev.	○			Rev.	○				Customer's Approval		
Rev.	○			Rev.	○				Date		
Rev.	○			Rev.	○				Signature		
Titel: CR2032 MFR RH2								Scale 2:1	Drawn	24.11.06	SRi
									Checked	30.11.06	BBö
									Approved		

renata batteries

CH-4452 Itingen
Switzerland

3.9163.4-

Downloaded from Datasheet.su