Capacitor data sheet

RCE5C1H470J0A2H03B

"#" indicates a package specification code.

Recommended | Flow OK | Complies with RoHS | AEC-Q200 | HIQ | Anti-noise | Deflecting crack | Soldering crack

< List of part numbers with package codes >
RCE5C1H470J0A2H03B

Shape

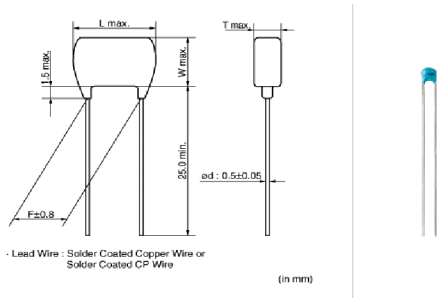

L size or outer diameter D (mm)	3.6 mm max.
W size	3.5 mm max.
T size	2.5 mm max.
Lead spacing F	2.5 ± 0.8mm
Lead diameter d	0.5 ± 0.05mm

Specifications

Capacitance	47pF ± 5%
Rated voltage	50Vdc
Temperature characteristics (complied standard)	C0G(EIA)
Capacitance change rate	± 5%
Temperature coefficient	0± 30ppm/℃
Temperature range of temperature characteristics	25 to 125℃
Operating temperature range	-55 to 125℃

Notes

Meet LF(lead Free), HF(Halogen Free)

References

Packaging	Specifications	Minimum quantity
B	Packing in bulk	500

Attention

1.This datasheet is downloaded from the website of Murata Manufacturing Co., Ltd. Therefore, it's specifications are subject to change or our products in it may be discontinued without advance notice. Please check with our sales representatives or product engineers before ordering.
2.This datasheet has only typical specifications because there is no space for detailed specifications.
Therefore, please review our product specifications or consult the approval sheet for product specifications before ordering.

Murata Manufacturing Co., Ltd. URL : http://www.murata.co.jp/

Last updated: 2014/03/10

Downloaded from DatasheetLib.com - datasheet search engine