PART NO.	REVISIONS								
MCCQ-211N	ECN #	REV	DESCRIPTION	DRAWN	DATE	CHECKD	DATE	APPRVD	DATE
	-	A	RELEASED	Geetha	02/6/08	Suresh	02/6/08	G C	17/6/08

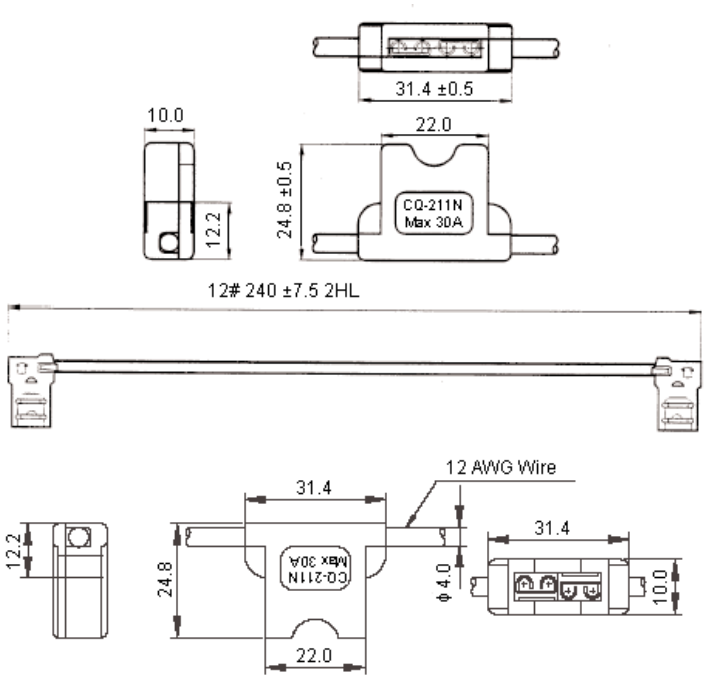

Dimensions : Millimetres

This data sheet and its contents (the "Information") belong to the Premier Farnell Group (the "Group") or are licensed to it. No licence is granted for the use of it other than for information purposes in connection with the products to which it relates. No licence of any intellectual property rights is granted. The Information is subject to change without notice and replaces all data sheets previously supplied. The Information supplied is believed to be accurate but the Group assumes no responsibility for its accuracy or completeness, any error in or omission from it or for any use made of it. Users of this data sheet should check for themselves the Information and the suitability of the products for their purpose and not make any assumptions based on information included or omitted. Liability for loss or damage resulting from any reliance on the Information or use of it (including liability resulting from negligence or where the Group was aware of the possibility of such loss or damage arising) is excluded. This will not operate to limit or restrict the Group's liability for death or personal injury resulting from its negligence. SPC MULTICOMP is the registered trademark of the Group. © Premier Farnell plc 2008.

TOLERANCES:

UNLESS OTHERWISE SPECIFIED, DIMENSIONS ARE FOR REFERENCE PURPOSES ONLY.

DRAWN BY:	DATE:
Geetha	02/06/08
CHECKED BY:	DATE:
Suresh	02/06/08
APPROVED BY:	DATE:
G.Cook	17/06/08

DRAWING TITLE: Automotive Fuse-Holders - ATO 30A In-Line

SIZE	DWG NO.	ELECTRONIC FILE	REV
A	M10001207	1586598_DWG	A

SCALE: NTS | U.O.M.: mm | SHEET: 1 OF 2

Downloaded from Datasheet.su

PART NO.	REVISIONS								
MCCQ-211N	ECN #	REV	DESCRIPTION	DRAWN	DATE	CHECKD	DATE	APPRVD	DATE
	-	A	RELEASED	Geetha	02/6/08	Suresh	02/6/08	G C	17/6/08

Specifications:

Rated current	: 30A.
Minimum insulation resistance	: 100MΩ at 500V dc.
Contact resistance	: 5mΩ at 1A dc.
Minimim dielectric strength	: 2000V ac for 60 seconds.
Body material	: Nylon 66.
Supply standard wire-AWG/length	: 12 AWG/8 inches loop.
Heavy duty type	: For ATQ blade type fuses.
Contact	: Brass, tin/nickel plated.

To install fuses with “loop” type wires, simply cut loop into two form separate wires of desired length.

Part Number Table

Description	Part Number
Fuseholder, In-Line, ATO, 30A	MCCQ-211N

http://www.farnell.com

http://www.newark.com

http://www.cpc.co.uk

This data sheet and its contents (the “Information”) belong to the Premier Farnell Group (the “Group”) or are licensed to it. No licence is granted for the use of it other than for information purposes in connection with the products to which it relates. No licence of any intellectual property rights is granted. The Information is subject to change without notice and replaces all data sheets previously supplied. The Information supplied is believed to be accurate but the Group assumes no responsibility for its accuracy or completeness, any error in or omission from it or for any use made of it. Users of this data sheet should check for themselves the Information and the suitability of the products for their purpose and not make any assumptions based on information included or omitted. Liability for loss or damage resulting from any reliance on the Information or use of it (including liability resulting from negligence or where the Group was aware of the possibility of such loss or damage arising) is excluded. This will not operate to limit or restrict the Group’s liability for death or personal injury resulting from its negligence. SPC MULTICOMP is the registered trademark of the Group. © Premier Farnell plc 2008.

TOLERANCES:

UNLESS OTHERWISE SPECIFIED, DIMENSIONS ARE FOR REFERENCE PURPOSES ONLY.

DRAWN BY:	DATE:
Geetha	02/06/08
CHECKED BY:	DATE:
Suresh	02/06/08
APPROVED BY:	DATE:
G.Cook	17/06/08

DRAWING TITLE: Automotive Fuse-Holders - ATO 30A In-Line

SIZE	DWG NO.	ELECTRONIC FILE	REV
A	M10001207	1586598_DWG	A

SCALE: NTS | U.O.M.: mm | SHEET: 2 OF 2

Downloaded from Datasheet.su