DS3251/DS3252/DS3253/DS3254 Single/Dual/Triple/Quad DS3/E3/STS-1 LIUs

www.maxim-ic.com

GENERAL DESCRIPTION

The DS3251 (single), DS3252 (dual), DS3253 (triple), and DS3254 (quad) line interface units (LIUs) perform the functions necessary for interfacing at the physical layer to DS3, E3, or STS-1 lines. Each LIU has independent receive and transmit paths and a built-in jitter attenuator. An on-chip clock adapter generates all line-rate clocks from a single input clock. Control interface options include 8-bit parallel, SPI, and hardware mode.

APPLICATIONS

SONET/SDH and PDH Multiplexers
Digital Cross-Connects
Access Concentrators
ATM and Frame Relay Equipment
Routers
PBXs
DSLAMs
CSU/DSUs

FUNCTIONAL DIAGRAM

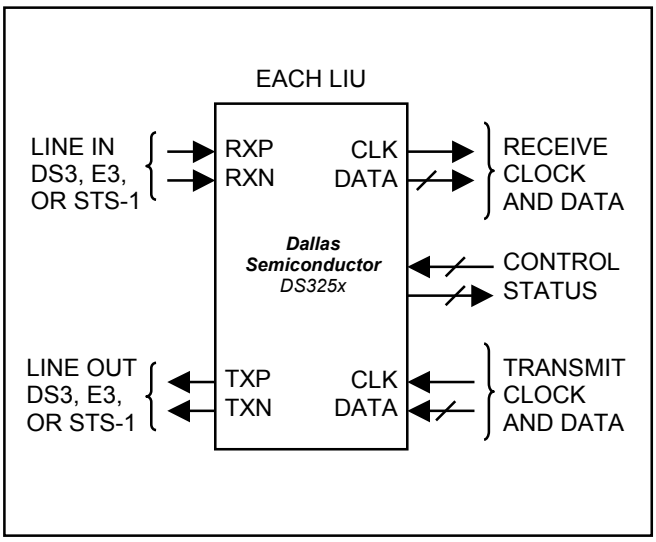

FEATURES

- Pin-Compatible Family of Products
- Each Port Independently Configurable
- Receive Clock and Data Recovery for Up to 380 meters (DS3), 440 meters (E3), or 360 meters (STS-1) of 75Ω Coaxial Cable
- Standards-Compliant Transmit Waveshaping
- Three Control Interface Options: 8-Bit Parallel, SPI, and Hardware Mode
- Built-In Jitter Attenuators can be Placed in Either the Receive or Transmit Paths
- Jitter Attenuators Have Provisionable Buffer Depth: 16, 32, 64, or 128 Bits
- Built-In Clock Adapter Generates All Line-Rate Clocks from a Single Input Clock (DS3, E3, STS-1, OC-3, 19.44MHz, 38.88MHz, 77.76MHz)
- B3ZS/HDB3 Encoding and Decoding
- Minimal External Components Required
- Local and Remote Loopbacks
- Low-Power 3.3V Operation (5V Tolerant I/O)
- Industrial Temperature Range: -40°C to +85°C
- Small Package: 144-Pin, 13mm x 13mm Thermally Enhanced CSBGA
- Drop-In Replacement for DS3151/52/53/54 LIUs
- IEEE 1149.1 JTAG Support

Features continued on page 5.

ORDERING INFORMATION

PART	LIU	TEMP RANGE	PIN-PACKAGE
DS3251	1	0°C to +70°C	144 TE-CSBGA
DS3251N	1	-40°C to +85°C	144 TE-CSBGA
DS3252	2	0°C to +70°C	144 TE-CSBGA
DS3252N	2	-40°C to +85°C	144 TE-CSBGA
DS3253	3	0°C to +70°C	144 TE-CSBGA
DS3253N	3	-40°C to +85°C	144 TE-CSBGA
DS3254	4	0°C to +70°C	144 TE-CSBGA
DS3254N	4	-40°C to +85°C	144 TE-CSBGA

Note: *Some revisions of this device may incorporate deviations from published specifications known as errata. Multiple revisions of any device may be simultaneously available through various sales channels. For information about device errata, click here: **www.maxim-ic.com/errata**.*

Downloaded from Datasheet.su

TABLE OF CONTENTS

1. STANDARDS COMPLIANCE 6
2. DETAILED DESCRIPTION 7
3. APPLICATION EXAMPLE 7
4. BLOCK DIAGRAMS 8
5. CONTROL INTERFACE MODES 9
6. PIN DESCRIPTIONS 10
7. REGISTER DESCRIPTIONS 15
8. RECEIVER 24
   - 8.1 Interfacing to the Line 24
   - 8.2 Optional Preamp 24
   - 8.3 Automatic Gain Control (AGC) and Adaptive Equalizer 24
   - 8.4 Clock and Data Recovery (CDR) 24
   - 8.5 Loss-of-Signal (LOS) Detector 24
   - 8.6 Framer Interface Format and the B3ZS/HDB3 Decoder 25
   - 8.7 Receive Line-Code Violation Counter 26
   - 8.8 Receiver Power-Down 26
   - 8.9 Receiver Jitter Tolerance 26
9. TRANSMITTER 27
   - 9.1 Transmit Clock 27
   - 9.2 Framer Interface Format and the B3ZS/HDB3 Encoder 27
   - 9.3 Pattern Generation 27
   - 9.4 Waveshaping, Line Build-Out, Line Driver 28
   - 9.5 Interfacing to the Line 28
   - 9.6 Transmit Driver Monitor 28
   - 9.7 Transmitter Power-Down 28
   - 9.8 Transmitter Jitter Generation (Intrinsic) 28
   - 9.9 Transmitter Jitter Transfer 28
10. JITTER ATTENUATOR 32
11. DIAGNOSTICS 34
   - 11.1 PRBS Generator and Detector 34
   - 11.2 Loopbacks 34
12. CLOCK ADAPTER 35
13. RESET LOGIC 35
14. TRANSFORMERS 36
15. CPU INTERFACES 37
   - 15.1 Parallel Interface 37
   - 15.2 SPI Interface 37
16. JTAG TEST ACCESS PORT AND BOUNDARY SCAN 40
   - 16.1 JTAG Description 40
   - 16.2 JTAG TAP Controller State Machine Description 40
   - 16.3 JTAG Instruction Register and Instructions 42
   - 16.4 JTAG Test Registers 43
17. ELECTRICAL CHARACTERISTICS 44
18. PIN ASSIGNMENTS 56
19. PACKAGE INFORMATION 70
20. THERMAL INFORMATION 71
21. REVISION HISTORY 71

Downloaded from Datasheet.su

LIST OF FIGURES

Figure 2-1. External Connections 7
Figure 3-1. 4-Port Unchannelized DS3/E3 Card 7
Figure 4-1. CPU Bus Mode Block Diagram 8
Figure 4-2. Hardware Mode Block Diagram 9
Figure 7-1. Status Register Logic 16
Figure 8-1. Receiver Jitter Tolerance 27
Figure 9-1. E3 Waveform Template 30
Figure 9-2. DS3 AIS Structure 31
Figure 10-1. Jitter Attenuation/Jitter Transfer 33
Figure 11-1. PRBS Output with Normal RCLK Operation 34
Figure 11-2. PRBS Output with Inverted RCLK Operation 34
Figure 15-1. SPI Clock Polarity and Phase Options 38
Figure 15-2. SPI Bus Transactions 39
Figure 16-1. JTAG Block Diagram 41
Figure 16-2. JTAG TAP Controller State Machine 42
Figure 17-1. Transmitter Framer Interface Timing Diagram 46
Figure 17-2. Receiver Framer Interface Timing Diagram 46
Figure 17-3. Parallel CPU Interface Timing Diagram (Nonmultiplexed) 50
Figure 17-4. Parallel CPU Interface Timing Diagram (Multiplexed) 52
Figure 17-5. SPI Interface Timing Diagram 54
Figure 17-6. JTAG Timing Diagram 55
Figure 18-1. DS3251 Hardware Mode Pin Assignment 58
Figure 18-2. DS3251 Parallel Bus Mode Pin Assignment 59
Figure 18-3. DS3251 SPI Bus Mode Pin Assignment 60
Figure 18-4. DS3252 Hardware Mode Pin Assignment 61
Figure 18-5. DS3252 Parallel Bus Mode Pin Assignment 62
Figure 18-6. DS3252 SPI Bus Mode Pin Assignment 63
Figure 18-7. DS3253 Hardware Mode Pin Assignment 64
Figure 18-8. DS3253 Parallel Bus Mode Pin Assignment 65
Figure 18-9. DS3253 SPI Bus Mode Pin Assignment 66
Figure 18-10. DS3254 Hardware Mode Pin Assignment 67
Figure 18-11. DS3254 Parallel Bus Mode Pin Assignment 68
Figure 18-12. DS3254 SPI Bus Mode Pin Assignment 69

Downloaded from Datasheet.su

LIST OF TABLES

Table 1-A. Applicable Telecommunications Standards 6
Table 6-A. Global Pin Descriptions 10
Table 6-B. Receiver Pin Descriptions 11
Table 6-C. Transmitter Pin Descriptions 11
Table 6-D. Hardware Mode Pin Descriptions 12
Table 6-E. Parallel Bus Mode Pin Descriptions 13
Table 6-F. SPI Bus Mode Pin Descriptions 13
Table 6-G. Transmitter Data Select Options 14
Table 6-H. Receiver PRBS Pattern Select Options 14
Table 6-I. Hardware Mode Jitter Attenuator Configuration 14
Table 7-A. Register Map 15
Table 9-A. DS3 Waveform Template 29
Table 9-B. DS3 Waveform Test Parameters and Limits 29
Table 9-C. STS-1 Waveform Template 29
Table 9-D. STS-1 Waveform Test Parameters and Limits 29
Table 9-E. E3 Waveform Test Parameters and Limits 30
Table 14-A. Transformer Characteristics 36
Table 14-B. Recommended Transformers 36
Table 16-A. JTAG Instruction Codes 42
Table 16-B. JTAG ID Code 43
Table 17-A. Recommended DC Operating Conditions 44
Table 17-B. DC Characteristics 44
Table 17-C. Framer Interface Timing 45
Table 17-D. Receiver Input Characteristics—DS3 and STS-1 Modes 47
Table 17-E. Receiver Input Characteristics—E3 Mode 47
Table 17-F. Transmitter Output Characteristics—DS3 and STS-1 Modes 48
Table 17-G. Transmitter Output Characteristics—E3 Mode 48
Table 17-H. Parallel CPU Interface Timing 49
Table 17-I. SPI Interface Timing 54
Table 17-J. JTAG Interface Timing 55
Table 18-A. Pin Assignments Sorted by Signal Name 56
Table 20-A. Thermal Properties, Natural Convection 71
Table 20-B. Theta-JA (θ_{JA}) vs. Airflow 71

Downloaded from Datasheet.su

FEATURES (CONTINUED)

Receiver

- AGC/equalizer block handles from 0 to 15dB of cable loss
- Loss-of-lock (LOL) PLL status indication
- Interfaces directly to a DSX monitor signal (~20dB flat loss) using built-in preamp
- Digital and analog loss-of-signal (LOS) detectors (ANSI T1.231 and ITU G.775)
- Optional B3ZS/HDB3 decoder
- Line-code violation output pin and counter
- Binary or bipolar framer interface
- On-board 2^{15} - 1 and 2^{23} - 1 PRBS detector
- Clock inversion for glueless interfacing
- Tri-state clock and data outputs support protection switching applications
- Per-channel power-down control

Transmitter

- Binary or bipolar framer interface
- Gapped clock capable up to 51.84MHz
- Wide 50 ± 20% transmit clock duty cycle
- Clock inversion for glueless interfacing
- Optional B3ZS/HDB3 encoder
- On-board 2^{15} - 1 and 2^{23} - 1 PRBS generator
- Complete DS3 AIS generator (ANSI T1.107)
- Unframed all-ones generator (E3 AIS)
- Line build-out (LBO) control
- Tri-state line driver outputs support protection switching applications
- Per-channel power-down control
- Output driver monitor

Jitter Attenuator

- On-chip crystal-less jitter attenuator
- Meets all applicable ANSI, ITU, ETSI and Telcordia jitter transfer and output jitter requirements
- Can be placed in the transmit path, receive path or disabled
- Selectable FIFO depth: 16, 32, 64 or 128 bits
- Overflow and underflow status indications

Clock Adapter

- Operates from a single DS3, E3, STS-1, 19.44 MHz, 38.88 MHz, or 77.76 MHz master clock
- Synthesizes clock rates that are not provided externally
- Use of common system timing frequencies such as 19.44 MHz eliminates the need for any local oscillators, reduces cost and board space
- Very small jitter gain and intrinsic jitter generation
- Optionally provides synthesized clocks on output pins for use by neighboring components, such as framers or mappers

Parallel CPU Interface

- Multiplexed or nonmultiplexed 8-bit interface
- Configurable for Intel mode ($\overline{CS}$, $\overline{WR}$, $\overline{RD}$) or Motorola mode ($\overline{CS}$, $\overline{DS}$, R/$\overline{W}$)

SPI CPU Interface

- Operation up to 10 Mbit/s
- Burst mode for multi-byte read and write accesses
- Programmable clock polarity and phase
- Half-duplex operation gives option to tie SDI and SDO together externally to reduce wire count

Downloaded from Datasheet.su

1. STANDARDS COMPLIANCE

Table 1-A. Applicable Telecommunications Standards

SPECIFICATION	SPECIFICATION TITLE
ANSI	
T1.102-1993	*Digital Hierarchy—Electrical Interfaces*
T1.107-1995	*Digital Hierarchy—Formats Specification*
T1.231-1997	*Digital Hierarchy—Layer 1 In-Service Digital Transmission Performance Monitoring*
T1.404-1994	*Network-to-Customer Installation—DS3 Metallic Interface Specification*
ITU-T	
G.703	*Physical/Electrical Characteristics of Hierarchical Digital Interfaces,* 1991
G.751	*Digital Multiplex Equipment Operating at the Third-Order Bit Rate of 34,368kbps and the Fourth-Order Bit Rate of 139,264kbps and Using Positive Justification,* 1993
G.775	*Loss of Signal (LOS) and Alarm Indication Signal (AIS) Defect Detection and Clearance Criteria*, November 1994
G.823	*The Control of Jitter and Wander within Digital Networks that are Based on the 2048kbps Hierarchy*, 1993
G.824	*The Control of Jitter and Wander within Digital Networks that are Based on the 1544kbps Hierarchy*, 1993
O.151	*Error Performance Measuring Equipment Operating at the Primary Rate and Above*, October 1992
ETSI	
ETS 300 686	*Business TeleCommunications; 34Mbps and 140Mbps Digital Leased Lines (D34U, D34S, D140U, and D140S); Network Interface Presentation,* 1996
ETS 300 687	*Business TeleCommunications; 34Mbps Digital Leased Lines (D34U and D34S); Connection Characteristics*, 1996
ETS EN 300 689	*Access and Terminals (AT); 34Mbps Digital Leased Lines (D34U and D34S); Terminal equipment interface,* July 2001
TBR 24	*Business TeleCommunications; 34Mbps Digital Unstructured and Structured Lease Lines; Attachment Requirements for Terminal Equipment Interface*, 1997
TELCORDIA	
GR-253-CORE	*SONET Transport Systems: Common Generic Criteria*, Issue 2, December 1995
GR-499-CORE	*Transport Systems Generic Requirements (TSGR): Common Requirements,* Issue 1, December 1998

Downloaded from Datasheet.su

2. DETAILED DESCRIPTION

The DS3251 (single), DS3252 (dual), DS3253 (triple), and DS3254 (quad) LIUs perform the functions necessary for interfacing at the physical layer to DS3, E3, or STS-1 lines. Each LIU has independent receive and transmit paths and a built-in jitter attenuator. The receiver performs clock and data recovery from a B3ZS- or HDB3-coded alternate mark inversion (AMI) signal and monitors for loss of the incoming signal. The receiver optionally performs B3ZS/HDB3 decoding and outputs the recovered data in either binary or bipolar format. The transmitter accepts data in either binary or bipolar format, optionally performs B3ZS/HDB3 encoding, and drives standard pulse-shape waveforms onto 75Ω coaxial cable. The jitter attenuator can be mapped into the receiver data path, mapped into the transmitter data path, or be disabled. An on-chip clock adapter generates all line-rate clocks from a single input clock. Control interface options include 8-bit parallel, SPI™, and hardware mode. The DS325x LIUs conform to the telecommunications standards listed in Table 1-A. Figure 2-1 shows the external components required for proper operation.

Shorthand Notations. The notation "DS325x" throughout this data sheet refers to either the DS3251, DS3252, DS3253, or DS3254. This data sheet is the specification for all four devices. The LIUs on the DS325x devices are identical. For brevity, this document uses the pin name and register name shorthand "NAMEn," where "n" stands in place of the LIU port number. For example, on the DS3254 quad LIU, TCLKn is shorthand notation for pins TCLK1, TCLK2, TCLK3, and TCLK4 on LIU ports 1, 2, 3, and 4, respectively. This document also uses generic pin and register names such as TCLK (without a number suffix) when describing LIU operation. When working with a specific LIU on the DS325x devices, generic names like TCLK should be converted to actual pin names, such as TCLK1.

Figure 2-1. External Connections

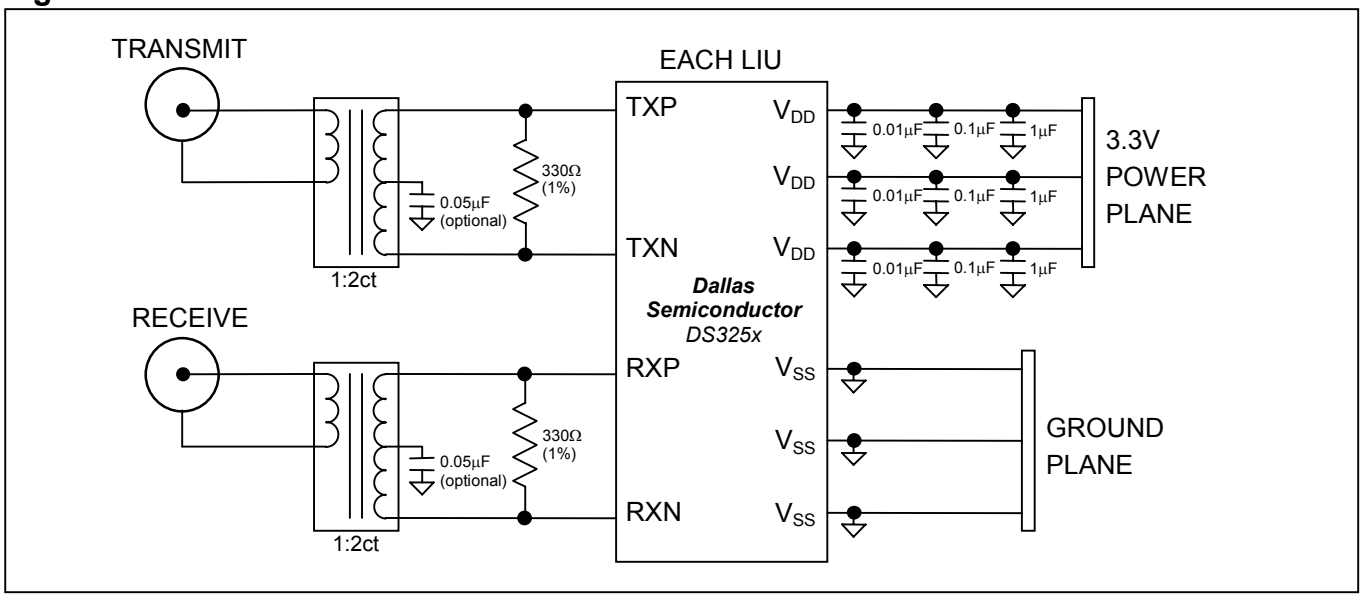

3. APPLICATION EXAMPLE

Figure 3-1. 4-Port Unchannelized DS3/E3 Card

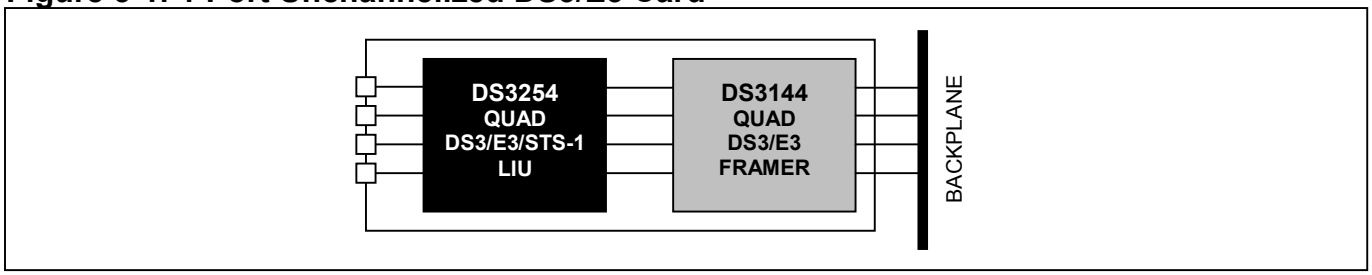

SPI is a trademark of Motorola, Inc.

Downloaded from Datasheet.su

4. BLOCK DIAGRAMS

Figure 4-1. CPU Bus Mode Block Diagram

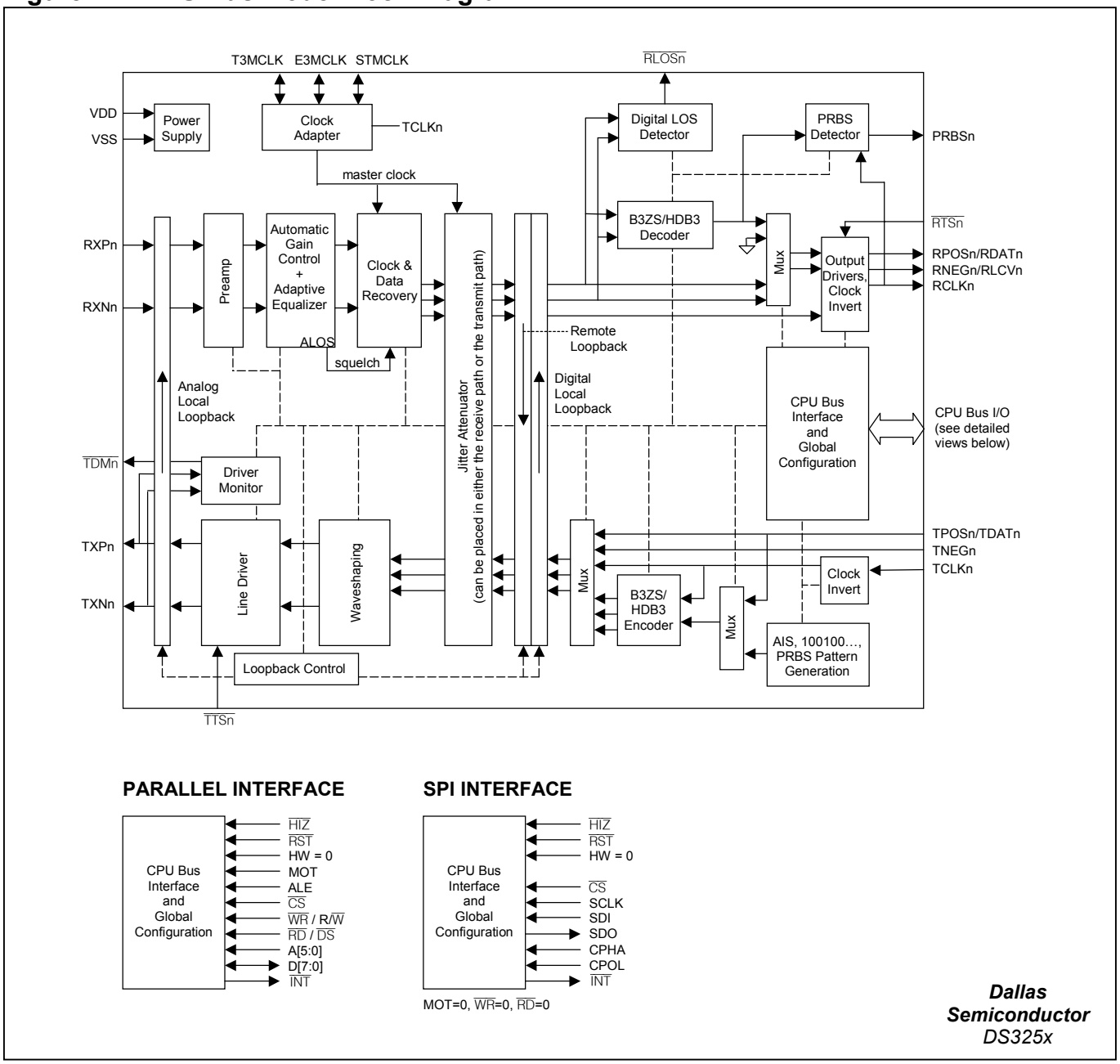

Downloaded from Datasheet.su

Figure 4-2. Hardware Mode Block Diagram

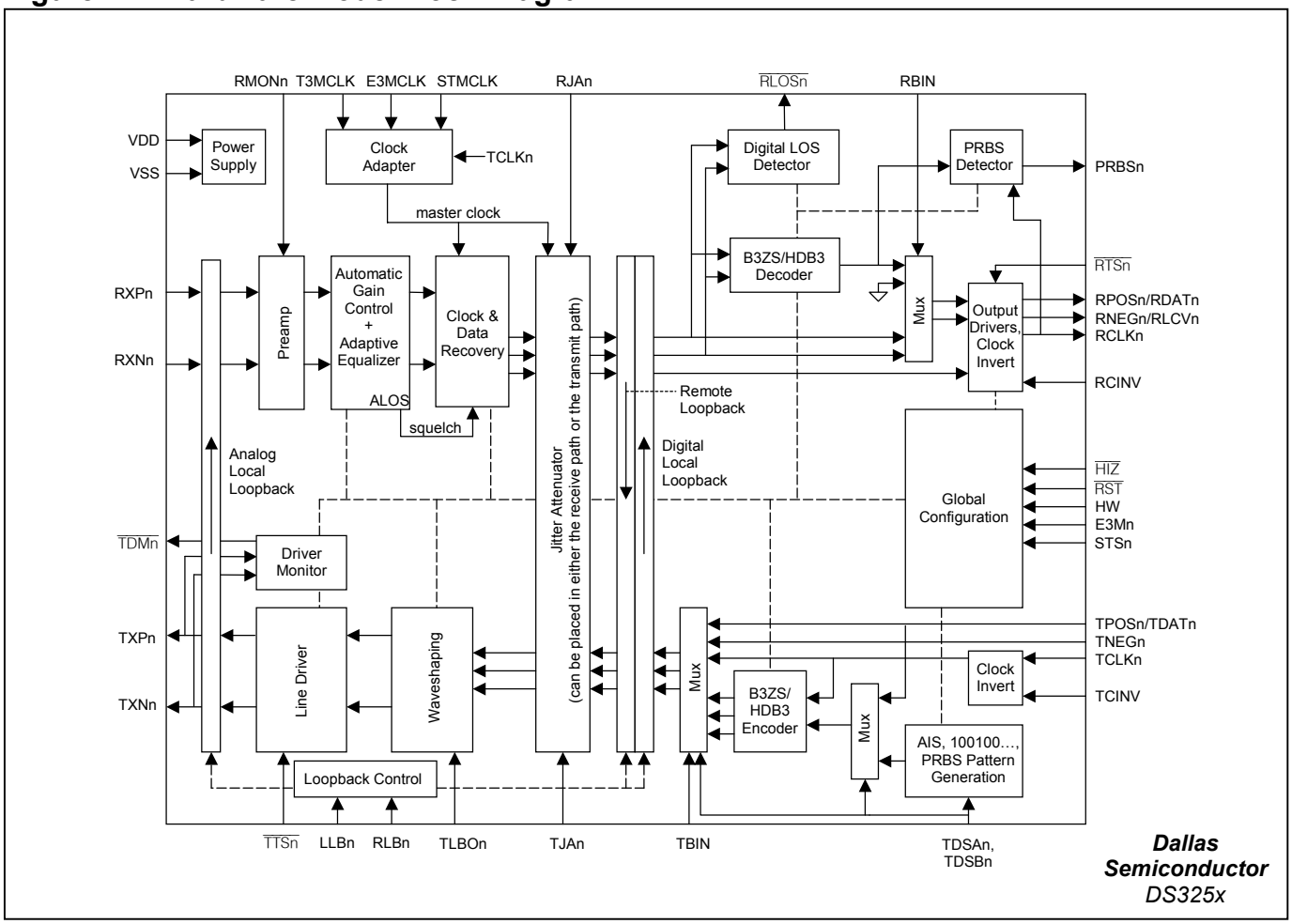

5. CONTROL INTERFACE MODES

The DS325x devices can operate in hardware mode or two different CPU bus modes: 8-bit parallel and SPI serial. In hardware mode, configuration input pins control device configuration, while status output pins indicate device status. Internal registers are not accessible in hardware mode. The device is configured for hardware mode when the HW pin is wired high (HW = 1).

In the CPU bus modes, most of the configuration and status pins used in hardware mode are reassigned to the CPU bus interface. Through the bus interface an external processor can access a set of internal configuration and status registers. A few configuration and status pins are active in both hardware mode and the CPU bus modes to support specialized applications, such as protection switching. The device is configured for CPU bus mode when the HW pin is wired low (HW = 0). The default CPU interface is 8-bit parallel. When the MOT, $\overline{RD}$ and $\overline{WR}$ pins are all low, the SPI interface is enabled. See Section 15 for more information on the CPU interfaces.

With the exception of the HW pin, configuration and status pins available in hardware mode have corresponding register bits in the CPU bus mode. The hardware mode pins and the CPU bus mode register bits have identical names and functions, with the exception that all register bits are active high. For example, LOS is indicated by the receiver on the $\overline{RLOS}$ *pin* (active low) in hardware mode and the RLOS *register bit* (active high) in CPU bus mode. The few configuration input pins that are active in CPU bus mode also have corresponding register bits. In these cases, the actual configuration is the logical OR of pin assertion and register bit assertion. For example, the transmitter output driver is tri-stated if the $\overline{TTS}$ *pin* is asserted (i.e., low) *or* the TTS *register bit* is asserted (high). Figure 4-1 and Figure 4-2 show block diagrams of the DS325x in hardware mode and in CPU bus mode.

Downloaded from Datasheet.su

6. PIN DESCRIPTIONS

Table 6-A through Table 6-C list the pins that are always active. Table 6-D through Table 6-F list the additional pins that active in each of the three control interface modes. Section 18 shows pin assignments for all three control interface modes.

Table 6-A. Global Pin Descriptions

Note: *These pins are always active.*

NAME	TYPE	FUNCTION
T3MCLK	I/O	**T3 Master Clock.** If a clock is applied to T3MCLK, it must be transmission-quality (±20ppm, low jitter). When present, the T3MCLK signal serves as the DS3 master clock for the CDRs and jitter attenuators of all LIUs configured for DS3 operation. If T3MCLK is held low, the clock adapter block synthesizes the DS3 master clock from the clock applied to E3MCLK (first choice) or the clock applied to STMCLK (second choice). If T3MCLK is held high, each LIU in DS3 mode uses its TCLK signal as its master clock. If T3MCLK is held low but E3MCLK and STMCLK are not toggling, then each LIU in DS3 mode uses its TCLK signal as its master clock. Pin is input-only in Hardware mode, input/output in CPU Bus mode. See Section 12 for more information.
E3MCLK	I/O	**E3 Master Clock.** If a clock is applied to E3MCLK, it must be transmission-quality (±20ppm, low jitter). When present, the E3MCLK signal serves as the E3 master clock for the CDRs and jitter attenuators of all LIUs configured for E3 operation. If E3MCLK is held low, the clock adapter block synthesizes the E3 master clock from the clock applied to T3MCLK (first choice) or the clock applied to STMCLK (second choice). If E3MCLK is held high, each LIU in E3 mode uses its TCLK signal as its master clock. If E3MCLK is held low but T3MCLK and STMCLK are not toggling, then each LIU in E3 mode uses its TCLK signal as its master clock. Pin is input-only in Hardware mode, input/output in CPU Bus mode. See Section 12 for more information.
STMCLK	I/O	**STS-1 Master Clock.** If a clock is applied to STMCLK, it must be transmission-quality (±20ppm, low jitter). When present, the STMCLK signal serves as the STS-1 master clock for the CDRs and jitter attenuators of all LIUs configured for STS-1 operation. If STMCLK is held low, the clock adapter block synthesizes the STS-1 master clock from the clock applied to T3MCLK (first choice) or the clock applied to E3MCLK (second choice). If STMCLK is held high, each LIU in STS-1 mode uses its TCLK signal as its master clock. If STMCLK is held low but T3MCLK and E3MCLK are not toggling, then each LIU in STS-1 mode uses its TCLK signal as its master clock. Pin is input-only in Hardware mode, input/output in CPU Bus mode. See Section 12 for more information.
$\overline{HIZ}$	I_{PU}	**High-Z Enable Input (Active Low, Open Drain, Internal 10kΩ Pullup to V_{DD})** 0 = tri-state all output pins (Note that the $\overline{JTRST}$ pin must be low.) 1 = normal operation
HW	I	**Hardware Mode Select** 0 = CPU bus mode 1 = Hardware mode See Section 5 for details.
JTCLK	I	**JTAG IEEE 1149.1 Test Serial Clock.** JTCLK shifts data into JTDI on the rising edge and out of JTDO on the falling edge. If boundary scan is not used, JTCLK should be pulled high.
JTDI	I_{PU}	**JTAG IEEE 1149.1 Test Serial-Data Input (Internal 10kΩ Pullup).** Test instructions and data are clocked in on this pin on the rising edge of JTCLK. If boundary scan is not used, JTDI should be left unconnected or pulled high.
JTDO	O	**JTAG IEEE 1149.1 Test Serial-Data Output.** Test instructions and data are clocked out on this pin on the falling edge of JTCLK.
$\overline{JTRST}$	I_{PU}	**JTAG IEEE 1149.1 Test Reset (Internal 10kΩ Pullup to V_{DD}).** This pin is used to asynchronously reset the test access port (TAP) controller. If boundary scan is not used, $\overline{JTRST}$ can be held low or high.
JTMS	I_{PU}	**JTAG IEEE 1149.1 Test Mode Select (Internal 10kΩ Pullup to V_{DD}).** This pin is sampled on the rising edge of JTCLK and is used to place the port into the various defined IEEE 1149.1 states. If boundary scan is not used, JTMS should be left unconnected or pulled high.
$\overline{RST}$	I_{PU}	**Reset Input (Active Low, Open Drain, Internal 10kΩ Pullup to V_{DD}).** When this global asynchronous reset is pulled low, the internal circuitry is reset and the internal registers (CPU bus mode) are forced to their default values. The device is held in reset as long as $\overline{RST}$ is low. $\overline{RST}$ should be held low for at least two master clock cycles. See Section 13 for more information.
$\overline{TEST}$	I_{PU}	**Factory Test Pin.** Leave unconnected or wire high for normal operation.
V_{DD}	P	**Positive Supply.** 3.3V ±5%. All V_{DD} signals should be wired together.
V_{SS}	P	**Ground Reference.** All V_{SS} signals should be wired together.

Downloaded from Datasheet.su

Table 6-B. Receiver Pin Descriptions

Note: *These pins are always active.*

NAME	TYPE	FUNCTION
RXPn, RXNn	I	**Receiver Analog Inputs.** These differential AMI inputs are coupled to the inbound 75Ω coaxial cable through a 1:2 step-up transformer (Figure 2-1).
RCLKn	O3	**Receiver Clock.** The recovered clock is output on the RCLK pin. Recovered data is output on the RPOS/RDAT and RNEG/RLCV pins on the falling edge of RCLK (RCINV = 0) or the rising edge of RCLK (RCINV = 1). During a loss of signal ($\overline{\text{RLOS}}$ = 0), the RCLK output signal is derived from the LIU's master clock.
RPOSn/ RDATn	O3	**Receiver Positive AMI/Receiver Data.** When the receiver is configured to have a bipolar interface (RBIN = 0), RPOS pulses high for each positive AMI pulse received. When the receiver is configured to have a binary interface (RBIN = 1), RDAT outputs decoded binary data. RPOS/RDAT is updated either on the falling edge of RCLK (RCINV = 0) or the rising edge of RCLK (RCINV = 1).
RNEGn/ RLCVn	O3	**Receiver Negative AMI/Line-Code Violation.** When the receiver is configured to have a bipolar interface (RBIN = 0), RNEG pulses high for each negative AMI pulse received. When the receiver is configured to have a binary interface (RBIN = 1), RLCV pulses high to flag code violations. See Section 8.6 for further details on code violations. RNEG/RLCV is updated either on the falling edge of RCLK (RCINV = 0) or the rising edge of RCLK (RCINV = 1).
$\overline{\text{RTSn}}$	I	**Receiver Tri-State Enable (Active Low).** $\overline{\text{RTS}}$ tri-states the RPOS/RDAT, RNEG/RLCV, and RCLK receiver outputs. This feature supports applications requiring LIU redundancy. Receiver outputs from multiple LIUs can be wire-ORed together, eliminating the need for external switches or muxes. The receiver continues to operate internally when $\overline{\text{RTS}}$ is low. 0 = tri-state the receiver outputs 1 = enable the receiver outputs
$\overline{\text{RLOSn}}$	O	**Receiver Loss of Signal (Active Low, Open Drain).** $\overline{\text{RLOS}}$ is asserted upon detection of 175 ±75 consecutive zeros in the receive data stream. $\overline{\text{RLOS}}$ is deasserted when there are no excessive zero occurrences over a span of 175 ±75 clock periods. An excessive zero occurrence is defined as three or more consecutive zeros in the DS3 and STS-1 modes or four or more zeros in the E3 mode. See Section 8.5 for more information.
PRBSn	O	**PRBS Detector Output.** This signal reports the status of the PRBS detector. See Section 11 for further details.

Table 6-C. Transmitter Pin Descriptions

Note: *These pins are always active.*

NAME	TYPE	FUNCTION
TCLKn	I	**Transmitter Clock.** A DS3 (44.736MHz ±20ppm), E3 (34.368MHz ±20ppm), or STS-1 (51.840MHz ±20ppm) clock should be applied at this signal. Data to be transmitted is clocked into the device at TPOS/TDAT and TNEG either on the rising edge of TCLK (TCINV = 0) or the falling edge of TCLK (TCINV = 1). See Section 9 for additional details.
TPOSn/ TDATn	I	**Transmitter Positive AMI/Transmitter Data.** When the transmitter is configured to have a bipolar interface (TBIN = 0), a positive pulse is transmitted on the line when TPOS is high. When the transmitter is configured to have a binary interface (TBIN = 1), the data on TDAT is transmitted after B3ZS or HDB3 encoding. TPOS/TDAT is sampled either on the rising edge of TCLK (TCINV = 0) or on the falling edge of TCLK (TCINV = 1).
TNEGn	I	**Transmitter Negative AMI.** When the transmitter is configured to have a bipolar interface (TBIN = 0), a negative pulse is transmitted on the line when TNEG is high. When the transmitter is configured to have a binary interface (TBIN = 1), TNEG is ignored and should be wired either high or low. TNEG is sampled either on the rising edge of TCLK (TCINV = 0) or on the falling edge of TCLK (TCINV = 1).
TXPn, TXNn	O3	**Transmitter Analog Outputs.** These differential AMI outputs are coupled to the outbound 75Ω coaxial cable through a 2:1 step-down transformer (Figure 2-1). These outputs can be tri-stated using the $\overline{\text{TTS}}$ pin or the TTS or TPS configuration bits.
$\overline{\text{TDMn}}$	O	**Transmitter Driver Monitor (Active Low, Open Drain).** $\overline{\text{TDM}}$ reports the status of the transmit driver monitor. When the monitor detects a faulty transmitter, $\overline{\text{TDM}}$ is driven low. $\overline{\text{TDM}}$ requires an external pullup to V_{DD}. See Section 9.6 for more information.
$\overline{\text{TTSn}}$	I	**Transmitter Tri-State Enable (Active Low).** $\overline{\text{TTS}}$ tri-states the transmitter outputs (TXP and TXN). This feature supports applications requiring LIU redundancy. Transmitter outputs from multiple LIUs can be wire-ORed together, eliminating external switches. The transmitter continues to operate internally when $\overline{\text{TTS}}$ is active. 0 = tri-state the transmitter output driver 1 = enable the transmitter output driver

Downloaded from Datasheet.su

Table 6-D. Hardware Mode Pin Descriptions

Note: *These pins are active in hardware mode.*

NAME	TYPE	FUNCTION
E3Mn	I	**E3 Mode Enable** 0 = DS3 operation 1 = E3 or STS-1 operation
STSn	I	**STS-1 Mode Enable** When E3M = 1, 0 = E3 operation 1 = STS-1 operation When E3M = 0, STS selects the DS3 AIS pattern. See Table 6-G.
LLBn, RLBn	I	**Local Loopback Select, Remote Loopback Select** {LLB, RLB} = 00 = no loopback 01 = remote loopback 10 = analog local loopback 11 = digital local loopback
RBIN	I	**Receiver Binary Framer-Interface Enable** 0 = Receiver framer interface is bipolar on the RPOS and RNEG pins. The B3ZS/HDB3 decoder is disabled. 1 = Receiver framer interface is binary on the RDAT pin with the RLCV pin indicating line-code violations. The B3ZS/HDB3 encoder is enabled.
RCINV	I	**Receiver Clock Invert** 0 = RPOS/RDAT and RNEG/RLCV update on the falling edge of RCLK. 1 = RPOS/RDAT and RNEG/RLCV update on the rising edge of RCLK.
RJAn	I	**Receiver Jitter Attenuator Enable** 0 = remove jitter attenuator from the receiver path 1 = insert jitter attenuator into the receiver path See Table 6-I for more information.
RMONn	I	**Receive Monitor-Preamp Enable.** RMON determines whether or not the receiver's preamp is enabled to provide flat gain to the incoming signal before the AGC/equalizer block processes it. This feature should be enabled when the device is being used to monitor signals that have been resistively attenuated by a monitor jack. See Section 8.2 for more information. 0 = disable the monitor preamp 1 = enable the monitor preamp
TBIN	I	**Transmitter Binary Framer-Interface Enable** 0 = Transmitter framer interface is bipolar on the TPOS and TNEG pins. The B3ZS/HDB3 encoder is disabled. 1 = Transmitter framer interface is binary on the TDAT pin. (TNEG is ignored and should be wired low.) The B3ZS/HDB3 encoder is enabled.
TCINV	I	**Transmitter Clock Invert** 0 = TPOS/TDAT and TNEG are sampled on the rising edge of TCLK. 1 = TPOS/TDAT and TNEG are sampled on the falling edge of TCLK.
TDSAn, TDSBn	I	**Transmitter Data Select.** These inputs select the source of the transmit data. See Table 6-G for details.
TJAn	I	**Transmitter Jitter Attenuator Enable** 0 = remove jitter attenuator from the transmitter path 1 = insert jitter attenuator into the transmitter path See Table 6-I for more information.
TLBOn	I	**Transmitter Line Build-Out Enable.** TLBO indicates cable length for waveform shaping in DS3 and STS-1 modes. TLBO is ignored for E3 mode and should be wired high or low. 0 = cable length ≥ 225ft 1 = cable length < 225ft

Downloaded from Datasheet.su

Table 6-E. Parallel Bus Mode Pin Descriptions

Note: *These pins are active in parallel bus mode.*

NAME	TYPE	FUNCTION
MOT	I	**Motorola-Style Parallel CPU Interface** 0 = Parallel CPU interface is Intel-style 1 = Parallel CPU interface is Motorola-style
ALE	I	**Address Latch Enable.** This signal controls a latch on the A[3:0] inputs. For a nonmultiplexed parallel CPU interface, ALE is wired high to make the latch transparent. For a multiplexed parallel CPU interface, the falling edge of ALE latches the address.
$\overline{CS}$	I	**Chip Select (Active Low).** $\overline{CS}$ must be asserted to read or write internal registers.
$\overline{WR}$ / R/$\overline{W}$	I	**Write Enable (Active Low) or Read/Write Select.** For the Intel-style parallel CPU interface (MOT = 0), $\overline{WR}$ is asserted to write internal registers. For the Motorola-style parallel CPU interface (MOT = 1), R/$\overline{W}$ determines the type of bus transaction, with R/$\overline{W}$ = 1 indicating a read and R/$\overline{W}$ = 0 indicating a write.
$\overline{RD}$ / $\overline{DS}$	I	**Read Enable (Active Low) or Data Strobe (Active Low).** For the Intel-style parallel CPU interface (MOT = 0), $\overline{RD}$ is asserted to read internal registers. For the Motorola-style parallel CPU interface (MOT = 1), the rising edge of $\overline{DS}$ writes data to internal registers.
A[5:0]	I	**Address Bus.** These inputs specify the address of the internal register to be accessed. A5 is not present on the DS3252. A5 and A4 are not present on the DS3251.
D[7:0]	I/O	**Data Bus.** These bidirectional lines are inputs during writes to internal registers and outputs during reads.
$\overline{INT}$	O	**Interrupt Output (Active Low, Open Drain).** This pin is forced low in response to one or more unmasked, active interrupt sources within the device. $\overline{INT}$ remains low until the interrupt is serviced or masked.

Table 6-F. SPI Bus Mode Pin Descriptions

Note: *These pins are active in SPI bus mode.*

NAME	TYPE	FUNCTION
MOT, $\overline{RD}$, $\overline{WR}$	I	Wire these pins low to enable SPI bus mode.
$\overline{CS}$	I	**Chip Select (Active Low).** $\overline{CS}$ must be asserted to read or write internal registers.
SCLK	I	**Serial Clock for SPI Interface.** SCLK is always driven by the SPI bus master.
SDI	I	**Serial Data Input for SPI Interface.** The SPI bus master transmits data to the device on this pin.
SDO	O	**Serial Data Output for SPI Interface** The device transmits data to the SPI bus master on this pin.
CPHA	I	**SPI Clock Phase** 0 = data is latched on the leading edge of the SCLK pulse 1 = data is latched on the trailing edge of the SCLK pulse
CPOL	I	**SPI Clock Polarity** 0 = SCLK is normally low and pulses high during bus transactions 1 = SCLK is normally high and pulses low during bus transactions
$\overline{INT}$	O	**Interrupt Output (Active Low, Open Drain).** This pin is forced low in response to one or more unmasked, active interrupt sources within the device. $\overline{INT}$ remains low until the interrupt is serviced or masked.

Note 1: PIN TYPES
I = input pin
I_{PU} = input pin with internal 10kΩ pullup
O = output pin
O3 = output pin that can be tri-stated
P = power-supply pin

Downloaded from Datasheet.su

Table 6-G. Transmitter Data Select Options

TDSA	TDSB	E3M	STS	Tx MODE	TRANSMIT DATA SELECTED
0	0	X	X	Any	Normal data as input at TPOS and TNEG
0	1	0	0	DS3	Unframed all ones
0	1	1	0	E3	
0	1	1	1	STS-1	
0	1	0	1	DS3	DS3 AIS per ANSI T1.107 (Figure 9-2)
1	0	X	X	Any	Unframed 100100… pattern
1	1	1	0	E3	2^{23} - 1 PRBS pattern per ITU O.151
1	1	0	X	DS3	2^{15} - 1 PRBS pattern per ITU O.151
1	1	1	1	STS-1	

Note 1: This coding of the TDSA, TDSB, E3M, and STS bits allows AIS generation to be enabled by holding TDSA = 0 and changing TDSB from 0 to 1. The type of DS3 AIS signal is selected by the STS bit with E3M = 0.

Note 2: If E3M and/or STS are changed when {TDSA,TDSB} $\neq$ 00, TDSA and TDSB must both be cleared to 0. After they are cleared, TDSA and TDSB can be configured to transmit a pattern in the new operating mode.

Table 6-H. Receiver PRBS Pattern Select Options

E3M	STS	Rx MODE	RECEIVER PRBS PATTERN SELECTED
1	0	E3	2^{23} - 1 PRBS pattern per ITU O.151
0	X	DS3	2^{15} - 1 PRBS pattern per ITU O.151
1	1	STS-1	

Table 6-I. Hardware Mode Jitter Attenuator Configuration

TJA	RJA	JITTER ATTENUATOR CONFIGURATION
0	0	Disabled
0	1	Receive path, 16-bit buffer depth
1	0	Transmit path, 16-bit buffer depth
1	1	Transmit path, 32-bit buffer depth

Downloaded from Datasheet.su

7. REGISTER DESCRIPTIONS

When the DS325x is configured in either of the two CPU bus modes (HW = 0), the registers shown in Table 7-A are accessible through the CPU bus interfaces. All registers for the LIU ports are forced to their default values during an internal power-on reset or when the $\overline{RST}$ pin is driven low. Setting an LIU's RST bit high forces all registers for that LIU to their default values. All register bits marked "—" must be written 0 and ignored when read. The TEST registers must be left at their reset value of 00h for normal operation.

On the DS3253, only registers for LIUs 1, 2, and 3 are available. Writes into LIU 4 address space are ignored. Reads from LIU 4 address space return all zeros. On the DS3252, address line A5 is not present, limiting the address space to the LIU 1 and LIU 2 registers. On the DS3251, address lines A5 and A4 are not present, limiting the address space to the LIU 1 registers.

Table 7-A. Register Map

ADDRESS	REGISTER	BIT 7	BIT 6	BIT 5	BIT 4	BIT 3	BIT 2	BIT 1	BIT 0
LIU 1									
00h	GCR1	E3M	STS	LLB	RLB	TDSA	TDSB	—	RST
01h	TCR1	JAL[1]	TBIN	TCINV	TJA	TPD	TTS	TLBO	JAL[0]
02h	RCR1	ITU	RBIN	RCINV	RJA	RPD	RTS	RMON	RCVUD
03h	SR1	—	—	TDM	PRBS	—	—	RLOL	RLOS
04h	SRL1	JAFL	JAEL	TDML	PRBSL	PBERL	RCVL	RLOLL	RLOSL
05h	SRIE1	JAFIE	JAEIE	TDMIE	PRBSIE	PBERIE	RCVIE	RLOLIE	RLOSIE
06h	RCVL1	RCV[7]	RCV[6]	RCV[5]	RCV[4]	RCV[3]	RCV[2]	RCV[1]	RCV[0]
07h	RCVH1	RCV[15]	RCV[14]	RCV[13]	RCV[12]	RCV[11]	RCV[10]	RCV[9]	RCV[8]
08h	CACR	T3MOE	E3MOE	STMOE	—	—	AMCSEL[1]	AMCSEL[0]	AMCEN
09h–0Fh	Test Registers	—	—	—	—	—	—	—	—
LIU 2									
10h	GCR2	E3M	STS	LLB	RLB	TDSA	TDSB	—	RST
11h	TCR2	JAL[1]	TBIN	TCINV	TJA	TPD	TTS	TLBO	JAL[0]
12h	RCR2	ITU	RBIN	RCINV	RJA	RPD	RTS	RMON	RCVUD
13h	SR2	—	—	TDM	PRBS	—	—	RLOL	RLOS
14h	SRL2	JAFL	JAEL	TDML	PRBSL	PBERL	RCVL	RLOLL	RLOSL
15h	SRIE2	JAFIE	JAEIE	TDMIE	PRBSIE	PBERIE	RCVIE	RLOLIE	RLOSIE
16h	RCVL2	RCV[7]	RCV[6]	RCV[5]	RCV[4]	RCV[3]	RCV[2]	RCV[1]	RCV[0]
17h	RCVH2	RCV[15]	RCV[14]	RCV[13]	RCV[12]	RCV[11]	RCV[10]	RCV[9]	RCV[8]
18h	unused	—	—	—	—	—	—	—	—
19h–1Fh	Test Registers	—	—	—	—	—	—	—	—
LIU 3									
20h	GCR3	E3M	STS	LLB	RLB	TDSA	TDSB	—	RST
21h	TCR3	JAL[1]	TBIN	TCINV	TJA	TPD	TTS	TLBO	JAL[0]
22h	RCR3	ITU	RBIN	RCINV	RJA	RPD	RTS	RMON	RCVUD
23h	SR3	—	—	TDM	PRBS	—	—	RLOL	RLOS
24h	SRL3	JAFL	JAEL	TDML	PRBSL	PBERL	RCVL	RLOLL	RLOSL
25h	SRIE3	JAFIE	JAEIE	TDMIE	PRBSIE	PBERIE	RCVIE	RLOLIE	RLOSIE
26h	RCVL3	RCV[7]	RCV[6]	RCV[5]	RCV[4]	RCV[3]	RCV[2]	RCV[1]	RCV[0]
27h	RCVH3	RCV[15]	RCV[14]	RCV[13]	RCV[12]	RCV[11]	RCV[10]	RCV[9]	RCV[8]
28h	unused	—	—	—	—	—	—	—	—
29h–2Fh	Test Registers	—	—	—	—	—	—	—	—
LIU 4									
30h	GCR4	E3M	STS	LLB	RLB	TDSA	TDSB	—	RST
31h	TCR4	JAL[1]	TBIN	TCINV	TJA	TPD	TTS	TLBO	JAL[0]
32h	RCR4	ITU	RBIN	RCINV	RJA	RPD	RTS	RMON	RCVUD
33h	SR4	—	—	TDM	PRBS	—	—	RLOL	RLOS
34h	SRL4	JAFL	JAEL	TDML	PRBSL	PBERL	RCVL	RLOLL	RLOSL
35h	SRIE4	JAFIE	JAEIE	TDMIE	PRBSIE	PBERIE	RCVIE	RLOLIE	RLOSIE
36h	RCVL4	RCV[7]	RCV[6]	RCV[5]	RCV[4]	RCV[3]	RCV[2]	RCV[1]	RCV[0]
37h	RCVH4	RCV[15]	RCV[14]	RCV[13]	RCV[12]	RCV[11]	RCV[10]	RCV[9]	RCV[8]
38h	unused	—	—	—	—	—	—	—	—
39h–3Fh	Test Registers	—	—	—	—	—	—	—	—

Note 1: Underlined bits are read-only; all other bits are read-write.
Note 2: The registers are named REGn, where n = the LIU number (1, 2, 3, or 4). The register names are hyperlinks to the register descriptions.
Note 3: The bit names are the same for each LIU register set.

Downloaded from Datasheet.su

Status Register Description

The status registers have two types of status bits. Real-time status bits—located in the SR registers—indicate the state of a signal at the time it was read. Latched status bits—located in the SRL registers—are set when a signal changes state (low-to-high, high-to-low, or both, depending on the bit) and cleared when written with a logic 1 value. After clearing, latched status bits remain cleared until the signal changes state again. Interrupt-enable bits—located in the SRIE registers—control whether or not the $\overline{INT}$ pin is driven low when latched register bits are set.

Figure 7-1. Status Register Logic

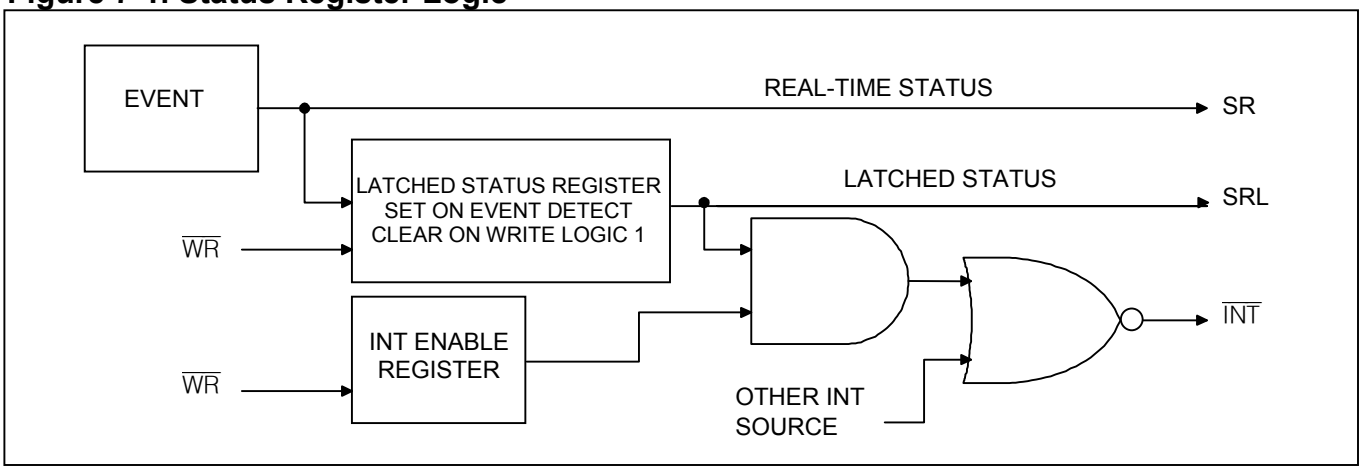

Register Name: **GCRn**
Register Description: **Global Configuration Register**
Register Address: **00h, 10h, 20h, 30h**

Bit	7	6	5	4	3	2	1	0
Name	E3M	STS	LLB	RLB	TDSA	TDSB	—	RST
Default	0	0	0	0	0	0	—	0

Bit 7: E3 Mode Enable (E3M)
0 = DS3 operation
1 = E3 or STS-1 operation

Bit 6: STS-1 Mode Enable (STS)
When E3M = 1,
0 = E3 operation
1 = STS-1 operation
When E3M = 0, STS selects the DS3 AIS pattern (Table 6-G).

Bits 5, 4: Local Loopback, Remote Loopback Select (LLB, RLB)
00 = no loopback
01 = remote loopback
10 = analog local loopback
11 = digital local loopback

Bits 3, 2: Transmitter Data Select (TDSA, TDSB). See Table 6-G for details.

Bit 0: Reset (RST). When this bit is high, the digital logic of the LIU is held in reset and all registers for that LIU (except the RST bit) are forced to their default values. RST is cleared to 0 at power-up and when the $\overline{RST}$ pin is activated.
0 = normal operation
1 = reset LIU

Downloaded from Datasheet.su

Register Name: **TCRn**
Register Description: **Transmitter Configuration Register**
Register Address: **01h, 11h, 21h, 31h**

Bit	7	6	5	4	3	2	1	0
Name	JAL[1]	TBIN	TCINV	TJA	TPD	TTS	TLBO	JAL[0]
Default	0	0	0	0	0	1	0	0

Bits 7 and 0: Jitter Attenuator Buffer Length (JAL[1:0])

00 = 16 bits
01 = 32 bits
10 = 64 bits
11 = 128 bits

These lengths are the total size of the buffer. The jitter attenuator control logic seeks to keep the read and write pointers half a buffer apart. Therefore typical latency through the jitter attenuator is half the buffer length.

Bit 6: Transmitter Binary Interface Enable (TBIN)

0 = Transmitter framer interface is bipolar on the TPOS and TNEG pins. The B3ZS/HDB3 encoder is disabled.
1 = Transmitter framer interface is binary on the TDAT pin. The B3ZS/HDB3 encoder is enabled.

Bit 5: Transmitter Clock Invert (TCINV)

0 = TPOS/TDAT and TNEG are sampled on the rising edge of TCLK.
1 = TPOS/TDAT and TNEG are sampled on the falling edge of TCLK.

Bit 4: Transmitter Jitter Attenuator Enable (TJA)

0 = Remove jitter attenuator from the transmitter path.
1 = Insert jitter attenuator into the transmitter path.

Bit 3: Transmitter Power-Down Enable (TPD)

0 = enable the transmitter
1 = power-down the transmitter (output driver tri-stated)

Bit 2: Transmitter Tri-State Enable (TTS). This bit is set to 1 on reset, which tri-states the transmitter TXP and TXN pins. The transmitter circuitry is left powered up in this mode. The $\overline{TTS}$ input pin is inverted and logically ORed with this bit.

0 = enable the transmitter output driver
1 = tri-state the transmitter output driver

Bit 1: Transmitter Line Build-Out (TLBO). TLBO indicates cable length for waveform shaping in DS3 and STS-1 modes. TLBO is ignored in E3 mode.

0 = cable length $\geq$ 225ft
1 = cable length < 225ft

Downloaded from Datasheet.su

Register Name: **RCRn**
Register Description: **Receiver Configuration Register**
Register Address: **02h, 12h, 22h, 32h**

Bit	7	6	5	4	3	2	1	0
Name	ITU	RBIN	RCINV	RJA	RPD	RTS	RMON	RCVUD
Default	0	0	0	0	0	1	0	0

Bit 7: ITU CV Mode (ITU). This bit controls what types of bipolar violations (BPVs) are flagged as code violations on the RLCV pin and counted in the RCV register. It also controls whether or not excessive zero (EXZ) events are flagged and counted. An EXZ event is the occurrence of a third consecutive zero (DS3 or STS-1 modes) or fourth consecutive zero (E3 mode) in a sequence of zeros.

0 = In all three modes (DS3, E3, and STS-1) BPVs that are not part of a valid codeword are flagged and counted. EXZ events are also flagged and counted.
1 = In DS3 and STS-1 modes, BPVs that are not part of valid codewords are flagged and counted. In E3 mode, BPVs that are the same polarity as the last BPV are flagged and counted. EXZ events are not flagged and counted in any mode.

Bit 6: Receiver Binary Interface Enable (RBIN)

0 = Receiver framer interface is bipolar on the RPOS and RNEG pins. The B3ZS/HDB3 decoder is disabled.
1 = Receiver framer interface is binary on the RDAT pin with the RLCV pin indicating line-code violations. The B3ZS/HDB3 encoder is enabled.

Bit 5: Receiver Clock Invert (RCINV)

0 = RPOS/RDAT and RNEG/RLCV are sampled on the falling edge of RCLK.
1 = RPOS/RDAT and RNEG/RLCV are sampled on the rising edge of RCLK.

Bit 4: Receiver Jitter Attenuator Enable (RJA). (Note that TCR:TJA = 1 takes precedence over RJA = 1.)

0 = remove jitter attenuator from the receiver path
1 = insert jitter attenuator into the receiver path

Bit 3: Receiver Power-Down Enable (RPD)

0 = enable the receiver
1 = power-down the receiver (RPOS/RDAT, RNEG/RLCV, and RCLK tri-stated)

Bit 2: Receiver Tri-State Enable (RTS). This signal is set to 1 on reset, which tri-states the receiver RPOS/RDAT, RNEG/RLCV, and RCLK pins. The receiver is left powered up in this mode. The $\overline{RTS}$ pin is inverted and logically ORed with this bit.

0 = enable the receiver outputs
1 = tri-state the receiver outputs (RPOS/RDAT, RNEG/RLCV, and RCLK)

Bit 1: Receiver Monitor Preamp Enable (RMON)

0 = disable the monitor preamp
1 = enable the monitor preamp

Bit 0: Receive Code-Violation Counter Update (RCVUD). When this control bit transitions from low to high, the RCVL and RCVH registers are loaded with the current code-violation count, and the internal code-violation counter is cleared.

0→1 = Update RCV registers and clear internal code-violation counter

Downloaded from Datasheet.su

Register Name: **SRn**
Register Description: **Status Register**
Register Address: **03h, 13h, 23h, 33h**

Bit	7	6	5	4	3	2	1	0
Name	—	—	TDM	PRBS	—	—	RLOL	RLOS
Default	—	—	0	0	—	—	1	1

Bit 5: Transmitter Driver Monitor (TDM). This read-only status bit indicates the current state of the transmit driver monitor. See Section 9.6 for more information.

0 = the transmitter is operating normally
1 = the transmitter amplitude is out of range

Bit 4: PRBS Detector Output (PRBS). This read-only status bit indicates the current state of the receiver's PRBS detector. See Table 6-H for the expected PRBS pattern.

0 = in sync with expected pattern
1 = out of sync, expected pattern not detected

Bit 1: Receiver Loss of Lock (RLOL). This read-only status bit indicates the current state of the receiver clock recovery PLL.

0 = the receiver PLL is locked onto the incoming signal
1 = the receiver PLL is not locked onto the incoming signal

Bit 0: Receiver Loss of Signal (RLOS). This read-only status bit indicates the current state of the receiver loss-of-signal detector.

0 = signal present
1 = loss of signal

Downloaded from Datasheet.su

Register Name: **SRLn**
Register Description: **Status Register Latched**
Register Address: **04h, 14h, 24h, 34h**

Bit	7	6	5	4	3	2	1	0
Name	JAFL	JAEL	TDML	PRBSL	PBERL	RCVL	RLOLL	RLOSL
Default	0	0	0	0	0	0	0	0

Bit 7: Jitter Attenuator Full Latched (JAFL). This latched status bit is set to one when the jitter attenuator buffer is full. JAFL is cleared when the host processor writes a one to it and is not set again until the full condition clears and the buffer becomes full again. When JAFL is set, it can cause a hardware interrupt to occur if the JAFIE interrupt-enable bit in the SRIE register is set to one. The interrupt is cleared when JAFL is cleared or JAFIE is set to zero.

Bit 6: Jitter Attenuator Empty Latched (JAEL). This latched status bit is set to one when the jitter attenuator buffer is empty. JAEL is cleared when the host processor writes a one to it and is not set again until the empty condition clears and the buffer becomes empty again. When JAEL is set, it can cause a hardware interrupt to occur if the JAEIE interrupt-enable bit in the SRIE register is set to one. The interrupt is cleared when JAEL is cleared or JAEIE is set to zero.

Bit 5: Transmitter Driver Monitor Latched (TDML). This latched status bit is set to one when the TDM status bit changes state (low to high or high to low). TDML is cleared when the host processor writes a one to it and is not set again until TDM changes state again. When TDML is set, it can cause a hardware interrupt to occur if the TDMIE interrupt-enable bit in the SRIE register is set to one. The interrupt is cleared when TDML is cleared or TDMIE is set to zero.

Bit 4: PRBS Detector Output Latched (PRBSL). This latched status bit is set to one when the PRBS status bit changes state (low to high or high to low). PRBSL is cleared when the host processor writes a one to it and is not set again until PRBS changes state again. When PRBSL is set, it can cause a hardware interrupt to occur if the PRBSIE interrupt-enable bit in the SRIE register is set to one. The interrupt is cleared when PRBSL is cleared or PRBSIE is set to zero.

Bit 3: PRBS Detector Bit Error Latched (PBERL). This latched status bit is set to one when the PRBS detector is in sync and a bit error has been detected. PBERL is cleared when the host processor writes a one to it and is not set again until another bit error is detected. When PBERL is set, it can cause a hardware interrupt to occur if the PBERIE interrupt-enable bit in the SRIE register is set to one. The interrupt is cleared when PBERL is cleared or PBERIE is set to zero.

Bit 2: Receiver Code Violation Latched (RCVL). This latched status bit is set to one when the RCV status bit in the SR register goes high. RCVL is cleared when the host processor writes a one to it and is not set again until RCV goes high again. When RCVL is set, it can cause a hardware interrupt to occur if the RCVIE interrupt-enable bit in the SRIE register is set to one. The interrupt is cleared when RCVL is cleared or RCVIE is set to zero.

Bit 1: Receiver Loss-of-Clock Lock Latched (RLOLL). This latched status bit is set to one when the RLOL status bit in the SR register changes state (low to high or high to low). RLOLL is cleared when the host processor writes a one to it and is not set again until RLOL changes state again. When RLOLL is set, it can cause a hardware interrupt to occur if the RLOLIE interrupt-enable bit in the SRIE register is set to one. The interrupt is cleared when RLOLL is cleared or RLOLIE is set to zero.

Bit 0: Receiver Loss-of-Signal Latched (RLOSL). This latched status bit is set to one when the RLOS status bit in the SR register changes state (low to high or high to low). RLOSL is cleared when the host processor writes a one to it and is not set again until RLOS changes state again. When RLOSL is set, it can cause a hardware interrupt to occur if the RLOSIE interrupt-enable bit in the SRIE register is set to one. The interrupt is cleared when RLOSL is cleared or RLOSIE is set to zero.

Downloaded from Datasheet.su

Register Name: **SRIEn**
Register Description: **Status Register Interrupt Enable**
Register Address: **05h, 15h, 25h, 35h**

Bit	7	6	5	4	3	2	1	0
Name	JAFIE	JAEIE	TDMIE	PRBSIE	PBERIE	RCVIE	RLOLIE	RLOSIE
Default	0	0	0	0	0	0	0	0

Bit 7: Jitter Attenuator Full Interrupt Enable (JAFIE)
0 = mask JAFL interrupt
1 = enable JAFL interrupt

Bit 6: Jitter Attenuator Empty Interrupt Enable (JAEIE)
0 = mask JAEL interrupt
1 = enable JAEL interrupt

Bit 5: Transmitter Driver Monitor Interrupt Enable (TDMIE)
0 = mask TDML interrupt
1 = enable TDML interrupt

Bit 4: PRBS Detector Interrupt Enable (PRBSIE)
0 = mask PRBSL interrupt
1 = enable PRBSL interrupt

Bit 3: PRBS Detector Bit-Error Interrupt Enable (PBERIE)
0 = mask PBERL interrupt
1 = enable PBERL interrupt

Bit 2: Receiver Line-Code Violation Interrupt Enable (RCVIE)
0 = mask RCVL interrupt
1 = enable RCVL interrupt

Bit 1: Receiver Loss-of-Clock Lock Interrupt Enable (RLOLIE)
0 = mask RLOLL interrupt
1 = enable RLOLL interrupt

Bit 0: Receiver Loss-of-Signal Interrupt Enable (RLOSIE)
0 = mask RLOSL interrupt
1 = enable RLOSL interrupt

Downloaded from Datasheet.su

Register Name: **RCVLn**
Register Description: **Receiver Code-Violation Count Register (Low Byte)**
Register Address: **06h, 16h, 26h, 36h**

Bit	7	6	5	4	3	2	1	0
Name	RCV[7]	RCV[6]	RCV[5]	RCV[4]	RCV[3]	RCV[2]	RCV[1]	RCV[0]
Default	0	0	0	0	0	0	0	0

Bits 7 to 0: Receiver Code-Violation Counter Register (RCV[7:0]). The full 16-bit RCV[15:0] field spans this register and RCVHn. RCV is an unsigned integer that indicates the line-code violation counter value. RCV is updated with the line-code violation counter value when the RCVUD control bit in the RCR register is toggled low to high. After the RCV register is updated, the line-code violation counter is cleared. The counter operates in two modes, depending on the setting of the ITU bit in the RCR register. See the RCR register description for details about the ITU control bit.

Register Name: **RCVHn**
Register Description: **Receiver Code-Violation Count Register (High Byte)**
Register Address: **07h, 17h, 27h, 37h**

Bit	7	6	5	4	3	2	1	0
Name	RCV[15]	RCV[14]	RCV[13]	RCV[12]	RCV[11]	RCV[10]	RCV[9]	RCV[8]
Default	0	0	0	0	0	0	0	0

Bits 7 to 0: Receiver Code-Violation Counter Register (RCV[15:8]). See the RCVLn register description.

Downloaded from Datasheet.su

Register Name: **CACR**
Register Description: **Clock Adapter Control Register**
Register Address: **08h**

Bit	7	6	5	4	3	2	1	0
Name	T3MOE	E3MOE	STMOE	—	—	AMCSEL[1]	AMCSEL[0]	AMCEN
Default	0	0	0	0	0	0	0	0

Bit 7: T3MCLK Output Enable (T3MOE). When the clock adapter block is configured to synthesize the DS3 master clock, the DS3 master clock can be output on the T3MCLK pin by setting T3MOE=1. This clock can then be used as the transmit clock for neighboring DS3 framers and other components requiring a DS3 clock. This bit should only be set to 1 if the T3MCLK pin is not driven externally.

0 = T3MCLK output driver disabled
1 = T3MCLK output driver enabled

Bit 6: E3MCLK Output Enable (E3MOE). When the clock adapter block is configured to synthesize the E3 master clock, the E3 master clock can be output on the E3MCLK pin by setting E3MOE=1. This clock can then be used as the transmit clock for neighboring E3 framers and other components requiring an E3 clock. This bit should only be set to 1 if the E3MCLK pin is not driven externally.

0 = E3MCLK output driver disabled
1 = E3MCLK output driver enabled

Bit 5: STMCLK Output Enable (STMOE). When the clock adapter block is configured to synthesize the STS-1 master clock, the STS-1 master clock can be output on the of the STMCLK pin by setting STMOE=1. This clock can then be used as the transmit clock for neighboring SONET framers, mappers and other components requiring an STS-1 clock. This bit should only be set to 1 if the STMCLK pin is not driven externally.

0 = STMCLK output driver disabled
1 = STMCLK output driver enabled

Bits 2 to 1: Alternate Master Clock Select (AMCSEL[1:0]). See Section 12 for details.

00 = 19.44 MHz
01 = 38.88 MHz
10 = 77.76 MHz
11 = {unused value}

Bit 0: Alternate Master Clock Enable (AMCEN). See Section 12 for details.

0 = alternate master clock mode disabled
1 = alternate master clock mode enabled

Downloaded from Datasheet.su

8. RECEIVER

8.1 Interfacing to the Line

The receiver can be transformer-coupled or capacitor-coupled to the line. Typically, the receiver interfaces to the incoming coaxial cable (75Ω) through a 1:2 step-up transformer. Figure 2-1 shows the arrangement of the transformer and other recommended interface components. Table 14-A specifies the required characteristics of the transformer. The receiver expects the incoming signal to be in B3ZS- or HDB3-coded AMI format.

8.2 Optional Preamp

The receiver can be used in monitoring applications, which typically have series resistors with a resistive loss of approximately 20dB. When the RMON input pin is high (hardware mode) or RCR:RMON=1 (CPU bus mode), the receiver compensates for this resistive loss by applying approximately 14dB of flat gain to the incoming signal before sending the signal to the AGC/equalizer block, where additional flat gain is applied as need.

8.3 Automatic Gain Control (AGC) and Adaptive Equalizer

The AGC circuitry applies flat (frequency independent) gain to the incoming signal to compensate for flat losses in the transmission channel and variations in transmission power. Since the incoming signal also experiences frequency-dependent losses as it passes through the coaxial cable, the adaptive equalizer circuitry applies frequency-dependent gain to offset line losses and restore the signal. The AGC/equalizer circuitry automatically adapts to coaxial cable losses from 0 to 15dB, which translates into 0 to 380 meters (DS3), 0 to 440 meters (E3), or 0 to 360 meters (STS-1) of coaxial cable (AT&T 734A or equivalent). The AGC and the equalizer work simultaneously but independently to supply a signal of nominal amplitude and pulse shape to the clock and data recovery block. The AGC/equalizer block automatically handles direct (0 meters) monitoring of the transmitter output signal.

8.4 Clock and Data Recovery (CDR)

The CDR block takes the amplified, equalized signal from the AGC/equalizer block and produces separate clock, positive data, and negative data signals. The CDR operates from the LIU's master clock. See Section 12 for more information about master clocks and clock selection.

The receiver locks onto the incoming signal using a clock recovery PLL. The status of the PLL lock is indicated in the RLOL status bit in the SR register. The RLOL bit is set when the difference between recovered clock frequency and MCLK frequency is greater than 7900ppm and cleared when the difference is less than 7700ppm. A change of state of the RLOL status bit can cause an interrupt on the $\overline{\text{INT}}$ pin if enabled to do so by the RLOLIE interrupt-enable bit in the SRIE register. Note that if the master clock is not present, RLOL is not set.

8.5 Loss-of-Signal (LOS) Detector

The receiver contains analog and digital LOS detectors. The analog LOS detector resides in the AGC/equalizer block. If the incoming signal level is less than a signal level approximately 24dB below nominal, analog LOS (ALOS) is declared. The ALOS signal cannot be directly examined, but when ALOS occurs the AGC/equalizer mutes the recovered data, forcing all zeros out of the data recovery circuitry and causing digital LOS (DLOS), which is indicated by the $\overline{\text{RLOS}}$ pin and the RLOS status bit in the SR register. ALOS clears when the incoming signal level is greater than or equal to a signal level approximately 18 dB below nominal.

The digital LOS detector declares DLOS when it detects 175 ± 75 consecutive zeros in the recovered data stream. When DLOS occurs, the receiver asserts the $\overline{\text{RLOS}}$ pin (hardware mode) or the RLOS status bit (CPU bus mode). DLOS is cleared when there are no EXZ occurrences over a span of 175 ±75 clock periods. An EXZ occurrence is defined as three or more consecutive zeros in the DS3 and STS-1 modes and four or more consecutive zeros in the E3 mode. The $\overline{\text{RLOS}}$ pin and the RLOS status bit are deasserted when the DLOS condition is cleared. In CPU bus mode, a change of the RLOS status bit can cause an interrupt on the $\overline{\text{INT}}$ pin if enabled to do so by the RLOSIE interrupt-enable bit in the SRIE register.

The requirements of ANSI T1.231 and ITU-T G.775 for DS3 LOS defects are met by the DLOS detector, which asserts RLOS when it counts 175 ±75 consecutive zeros coming out of the CDR block and clears RLOS when it counts 175 ±75 consecutive pulse intervals without excessive zero occurrences.

Downloaded from Datasheet.su

The requirements of ITU-T G.775 for E3 LOS defects are met by a combination of the ALOS detector and the DLOS detector, as follows:

For E3 RLOS Assertion:

1) The ALOS detector in the AGC/equalizer block detects that the incoming signal is less than or equal to a signal level approximately 24 dB below nominal, and mutes the data coming out of the clock and data recovery block. (24 dB below nominal is in the "tolerance range" of G.775, where LOS may or may not be declared.)
2) The DLOS detector counts 175 ±75 consecutive zeros coming out of the CDR block and asserts RLOS. (175 ±75 meets the $10 \le N \le 255$ pulse-interval duration requirement of G.775.)

For E3 RLOS Clear:

1) The ALOS detector in the AGC/equalizer block detects that the incoming signal is greater than or equal to a signal level approximately 18dB below nominal, and enables data to come out of the CDR block. (18dB is in the "tolerance range" of G.775, where LOS may or may not be declared.)
2) The DLOS detector counts 175 ± 75 consecutive pulse intervals without EXZ occurrences and deasserts RLOS. (175 ± 75 meets the $10 \le N \le 255$ pulse-interval duration requirement of G.775.)

The DLOS detector supports the requirements of ANSI T1.231 for STS-1 LOS defects. At STS-1 rates, the time required for the DLOS detector to count 175 ± 75 consecutive zeros falls in the range of $2.3 \le T \le 100\mu s$ required by ANSI T1.231 for declaring an LOS defect. Although the time required for the DLOS detector to count 175 ± 75 consecutive pulse intervals with no excessive zeros is less than the 125µs–250µs period required by ANSI T1.231 for clearing an LOS defect, a period of this length where LOS is inactive can easily be timed in software.

During LOS, the RCLK output pin is derived from the LIU's master clock. The ALOS detector has a longer time constant than the DLOS detector. Thus, when the incoming signal is lost, the DLOS detector activates first (asserting the RLOS pin or bit), followed by the ALOS detector. When a signal is restored, the DLOS detector does not get a valid signal that it can qualify for no EXZ occurrences until the ALOS detector has seen the signal rise above a signal level approximately 18dB below nominal.

8.6 Framer Interface Format and the B3ZS/HDB3 Decoder

The recovered data can be output in either binary or bipolar format. To select the bipolar interface format, pull the RBIN pin low (hardware mode) or clear the RBIN configuration bit in the RCR register (CPU bus mode). In bipolar format, the B3ZS/HDB3 decoder is disabled and the recovered data is buffered and output on the RPOS and RNEG outputs. Received positive-polarity pulses are indicated by RPOS = 1, while negative-polarity pulses are indicated by RNEG = 1. In bipolar interface format, the receiver simply passes on the received data and does not check it for BPV or EXZ occurrences.

To select the binary interface format, pull the RBIN pin high (hardware mode) or set the RBIN configuration bit in the RCR register (CPU bus mode). In binary format, the B3ZS/HBD3 decoder is enabled, and the recovered data is decoded and output as a binary value on the RDAT pin. Code violations are flagged on the RLCV pin. In the discussion that follows, a valid pulse that conforms to the AMI rule is denoted as B. A BPV pulse that violates the AMI rule is denoted as V.

In DS3 and STS-1 modes, B3ZS decoding is performed. RLCV is asserted during any RCLK cycle where the data on RDAT causes ones of the following code violations:

- Hardware mode or ITU bit set to 0
  - A BPV immediately preceded by a valid pulse (B, V).
  - A BPV with the same polarity as the last BPV.
  - The third zero in an EXZ occurrence.

- ITU bit set to 1
  - A BPV immediately preceded by a valid pulse (B, V).
  - A BPV with the same polarity as the last BPV.

Downloaded from Datasheet.su

In E3 mode, HDB3 decoding is performed. RLCV is asserted during any RCLK cycle where the data on RDAT causes one of the following code violations:

- Hardware mode or ITU bit set to 0
  - A BPV immediately preceded by a valid pulse (B, V) or by a valid pulse and a zero (B, 0, V).
  - A BPV with the same polarity as the last BPV.
  - The fourth zero in an EXZ occurrence (only in hardware mode or when ITU = 0).

- ITU bit set to 1
  - A BPV with the same polarity as the last BPV.

When RLCV is asserted to flag a BPV, the RDAT pin outputs a one. The state bit that tracks the polarity of the last BPV is toggled on every BPV, whether part of a valid B3ZS/HDB3 codeword or not.

To support a glueless interface to a variety of neighboring components, the polarity of RCLK can be inverted. Normally, data is output on the RPOS/RDAT and RNEG/RLCV pins on the falling edge of RCLK. To output data on these pins on the rising edge of RCLK, pull the RCINV pin high (hardware mode) or set the RCINV configuration bit in the RCR register (CPU bus mode).

The RCLK, RPOS/RDAT, and RNEG/RLCV pins can be tri-stated to support protection switching and redundant-LIU applications. This tri-stating capability supports system configurations where two or more LIUs are wire-ORed together and a system processor selects one to be active. To tri-state RCLK, RPOS/RDAT, and RNEG/RLCV, assert the $\overline{\text{RTS}}$ pin or the RTS configuration bit in the RCR register.

8.7 Receive Line-Code Violation Counter

The line-code violation counter is always enabled regardless of the settings of the RBIN pin or the RBIN configuration bit. The receiver has an internal 16-bit saturating counter and a 16-bit latch, which the CPU can read as registers RCVH and RCVL. The value of the internal counter is latched into the RCVH/RCVL register and cleared when the receive code-violation counter update bit, RCR:RCVUD, is changed from a zero to a one. The RCVUD bit must be cleared back to a zero before a new update can occur. If there is an LCV increment pulse and an update pulse in the same clock period, the counter is preset to a one rather than cleared so that the LCV is not missed. The counter is incremented when the RLCV pin flags a code violation as described in Section 8.6. The counter saturates at 65,535 (0FFFFh) and does not roll over.

8.8 Receiver Power-Down

To minimize power consumption when the receiver is not being used, assert the RPD configuration bit in the RCR register (CPU bus mode). When the receiver is powered down, the RCLK, RPOS/RDAT, and RNEG/RLCV pins are tri-stated. In addition, the RXP and RXN pins become high impedance.

8.9 Receiver Jitter Tolerance

The receiver exceeds the input jitter tolerance requirements of all applicable telecommunication standards in Table 1-A. See Figure 8-1.

Downloaded from Datasheet.su

Figure 8-1. Receiver Jitter Tolerance

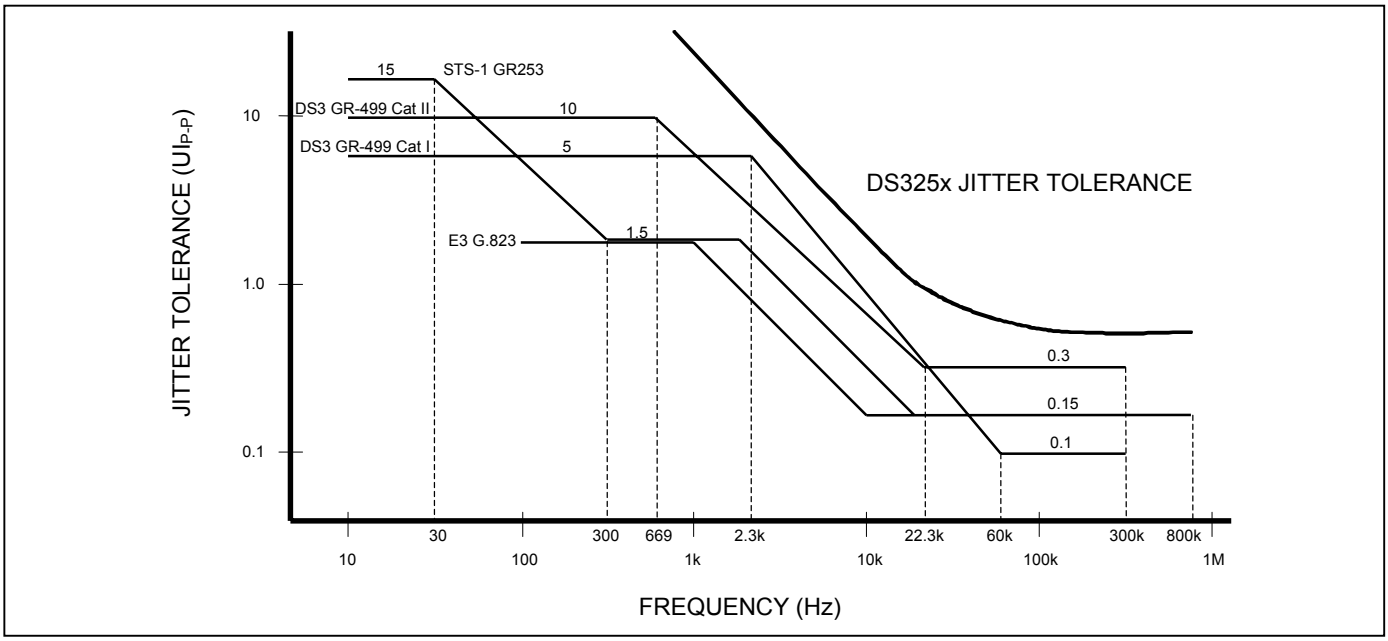

9. TRANSMITTER

9.1 Transmit Clock

The clock applied at the TCLK input clocks in data on the TPOS/TDAT and TNEG pins. If the jitter attenuator is not enabled in the transmit path, the signal on TCLK is the transmit line clock and must be transmission quality (i.e., ±20ppm frequency accuracy and low jitter). If the jitter attenuator is enabled in the transmit path, the signal on TCLK can be jittery and/or periodically gapped, but must still have an average frequency within ±20ppm of the nominal line rate. When enabled in the transmit path, the jitter attenuator generates the transmit line clock from the appropriate master clock.

The polarity of TCLK can be inverted to support glueless interfacing to a variety of neighboring components. Normally data is sampled on the TPOS/TDAT and TNEG pins on the rising edge of TCLK. To sample data on the falling edge of TCLK, pull the TCINV pin high (hardware mode) or set the TCINV configuration bit in the TCR register (CPU bus mode).

9.2 Framer Interface Format and the B3ZS/HDB3 Encoder

Data to be transmitted can be input in either binary or bipolar format. To select the binary interface format, pull the TBIN pin high (hardware mode) or set the TBIN configuration bit in the TCR register (CPU bus mode). In binary format, the B3ZS/HBD3 encoder is enabled, and the data to be transmitted is sampled on the TDAT pin. The TNEG pin is ignored in binary interface mode and should be wired low. In DS3 and STS-1 modes, the B3ZS/HDB3 encoder operates in the B3ZS mode. In E3 mode the encoder operates in HDB3 mode.

To select the bipolar interface format, pull the TBIN pin low (hardware mode) or clear the TBIN configuration bit in the TCR register (CPU bus mode). In bipolar format, the B3ZS/HDB3 encoder is disabled and the data to be transmitted is sampled on the TPOS and TNEG pins. Positive-polarity pulses are indicated by TPOS = 1, while negative-polarity pulses are indicated by TNEG = 1.

9.3 Pattern Generation

The transmitter can generate several patterns internally, including unframed all ones (E3 AIS), 100100…, and DS3 AIS. See Figure 9-2 for the structure of the DS3 AIS signal. The TDSA and TDSB input pins (hardware mode) or the TDSA and TDSB control bits in the GCR register (CPU bus mode) are used to select these patterns. Table 6-G indicates the possible selections.

Downloaded from Datasheet.su

9.4 Waveshaping, Line Build-Out, Line Driver

The waveshaping block converts the transmit clock, positive data, and negative data signals into a single AMI signal with the waveshape required for interfacing to DS3/E3/STS-1 lines. Table 9-A through Table 9-E and Figure 9-1 show the waveform template specifications and test parameters.

Because DS3 and STS-1 signals must meet the waveform templates at the cross-connect through any cable length from 0 to 450ft, the waveshaping circuitry includes a selectable LBO feature. For cable lengths of 225ft or greater, the TLBO pin (hardware mode) or the TLBO configuration bit in the TCR register (CPU bus mode) should be low. When TLBO is low, output pulses are driven onto the coaxial cable without any preattenuation. For cable lengths less than 225ft, TLBO should be high to enable the LBO circuitry. When TLBO is high, pulses are preattenuated by the LBO circuitry before being driven onto the coaxial cable. The LBO circuitry provides attenuation that mimics the attenuation of 225ft of coaxial cable.

The transmitter line driver can be disabled and the TXP and TXN outputs tri-stated by asserting the $\overline{\text{TTS}}$ input or the TTS configuration bit in the TCR register. Powering down the transmitter through the TPD configuration bit in the TCR register (CPU bus mode) also tri-states the TXP and TXN outputs.

9.5 Interfacing to the Line

The transmitter interfaces to the outgoing DS3/E3/STS-1 coaxial cable (75Ω) through a 2:1 step-down transformer connected to the TXP and TXN pins. Figure 2-1 shows the arrangement of the transformer and other recommended interface components. Table 14-A specifies the required characteristics of the transformer.

9.6 Transmit Driver Monitor

The transmit driver monitor compares the amplitude of the transmit waveform to thresholds V_{TXMIN} and V_{TXMAX}. If the amplitude is less than V_{TXMIN} or greater than V_{TXMAX} for approximately 32 MCLK cycles, then the monitor activates the $\overline{\text{TDM}}$ output pin (hardware mode or CPU bus mode) or sets the TDM status bit in the SR register and optionally activates the $\overline{\text{INT}}$ output (CPU bus mode). When the transmitter is tri-stated, the transmit driver monitor is also disabled.

Note that the transmit driver monitor can be affected by reflections caused by shorts and opens on the line. A short at a distance less than a few inches (~11 inches for FR4 material) can introduce inverted reflections that reduce the outgoing pulse amplitude below the V_{TXMIN} threshold and thereby activate the $\overline{\text{TDM}}$ pin and/or TDM status bit. Similarly an open circuit a similar distance away can introduce noninverted reflections that increase the outgoing amplitude above the V_{TXMAX} threshold and thereby activate $\overline{\text{TDM}}$ and/or TDM. Shorts and opens at larger distances away from TXP/TXN can also activate $\overline{\text{TDM}}$ and/or TDM, but this effect is data-pattern dependent.

9.7 Transmitter Power-Down

To minimize power consumption when the transmitter is not being used, assert the TPD configuration bit in the TCR register (CPU bus mode only). When the transmitter is powered down, the TXP and TXN pins are put in a high-impedance state and the transmit amplifiers are powered down.

9.8 Transmitter Jitter Generation (Intrinsic)

The transmitter meets the jitter generation requirements of all applicable standards, with or without the jitter attenuator enabled.

9.9 Transmitter Jitter Transfer

Without the jitter attenuator enabled in the transmit side, the transmitter passes jitter through unchanged. With the jitter attenuator enabled in the transmit side, the transmitter meets the jitter transfer requirements of all applicable telecommunication standards in Table 1-A. See Figure 10-1.

Downloaded from Datasheet.su

Table 9-A. DS3 Waveform Template

TIME (IN UNIT INTERVALS)	NORMALIZED AMPLITUDE EQUATION
UPPER CURVE	
$-0.85 \le T \le -0.68$	0.03
$-0.68 \le T \le +0.36$	$0.5\{1 + \sin[(\pi / 2)(1 + T / 0.34)]\} + 0.03$
$0.36 \le T \le 1.4$	$0.08 + 0.407e^{-1.84(T - 0.36)}$
LOWER CURVE	
$-0.85 \le T \le -0.36$	-0.03
$-0.36 \le T \le +0.36$	$0.5\{1 + \sin[(\pi / 2)(1 + T / 0.18)]\} - 0.03$
$0.36 \le T \le 1.4$	-0.03

Governing Specifications: ANSI T1.102 and Bellcore GR-499.

Table 9-B. DS3 Waveform Test Parameters and Limits

PARAMETER	SPECIFICATION
Rate	44.736Mbps (±20ppm)
Line Code	B3ZS
Transmission Medium	Coaxial cable (AT&T 734A or equivalent)
Test Measurement Point	At the end of 0 to 450ft of coaxial cable
Test Termination	75Ω (±1%) resistive
Pulse Amplitude	Between 0.36V and 0.85V
Pulse Shape	An isolated pulse (preceded by two zeros and followed by one or more zeros) falls within the curves listed in Table 9-A.
Unframed All-Ones Power Level at 22.368MHz	Between -1.8dBm and +5.7dBm
Unframed All-Ones Power Level at 44.736MHz	At least 20dB less than the power measured at 22.368MHz
Pulse Imbalance of Isolated Pulses	Ratio of positive and negative pulses must be between 0.90 and 1.10.

Table 9-C. STS-1 Waveform Template

TIME (IN UNIT INTERVALS)	NORMALIZED AMPLITUDE EQUATIONS
UPPER CURVE	
$-0.85 \le T \le -0.68$	0.03
$-0.68 \le T \le +0.26$	$0.5\{1 + \sin[(\pi / 2)(1 + T / 0.34)]\} + 0.03$
$0.26 \le T \le 1.4$	$0.1 + 0.61e^{-2.4(T - 0.26)}$
LOWER CURVE	
$-0.85 \le T \le -0.36$	-0.03
$-0.36 \le T \le +0.36$	$0.5\{1 + \sin[(\pi / 2)(1 + T / 0.18)]\} - 0.03$
$0.36 \le T \le 1.4$	-0.03

Governing Specifications: Bellcore GR-253 and Bellcore GR-499 and ANSI T1.102.

Table 9-D. STS-1 Waveform Test Parameters and Limits

PARAMETER	SPECIFICATION
Rate	51.840Mbps (±20ppm)
Line Code	B3ZS
Transmission Medium	Coaxial cable (AT&T 734A or equivalent)
Test Measurement Point	At the end of 0 to 450ft of coaxial cable
Test Termination	75Ω (±1%) resistive
Pulse Amplitude	0.800V nominal (not covered in specs)
Pulse Shape	An isolated pulse (preceded by two zeros and followed by one or more zeros) falls within the curved listed in Table 9-C.
Unframed All-Ones Power Level at 25.92MHz	Between -1.8dBm and +5.7dBm
Unframed All-Ones Power Level at 51.84MHz	At least 20dB less than the power measured at 25.92MHz.

Downloaded from Datasheet.su

Table 9-E. E3 Waveform Test Parameters and Limits

PARAMETER	SPECIFICATION
Rate	34.368Mbps (±20ppm)
Line Code	HDB3
Transmission Medium	Coaxial cable (AT&T 734A or equivalent)
Test Measurement Point	At the transmitter
Test Termination	75Ω (±1%) resistive
Pulse Amplitude	1.0V (nominal)
Pulse Shape	An isolated pulse (preceded by two zeros and followed by one or more zeros) falls within the template shown in Figure 9-1.
Ratio of the Amplitudes of Positive and Negative Pulses at the Center of the Pulse Interval	0.95 to 1.05
Ratio of the Widths of Positive and Negative Pulses at the Nominal Half Amplitude	0.95 to 1.05

Figure 9-1. E3 Waveform Template

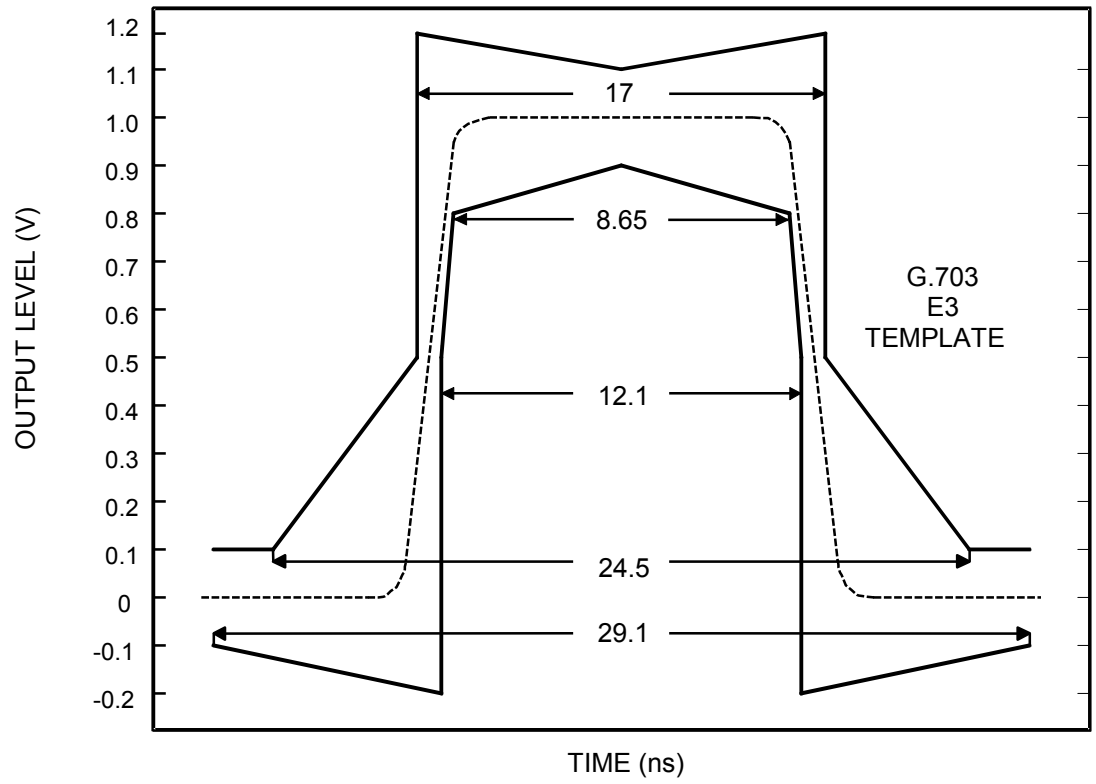

Downloaded from Datasheet.su

Figure 9-2. DS3 AIS Structure

M1 Subframe

X1 (1)	84 Info Bits	F1 (1)	84 Info Bits	C1 (0)	84 Info Bits	F2 (0)	84 Info Bits	C2 (0)	84 Info Bits	F3 (0)	84 Info Bits	C3 (0)	84 Info Bits	F4 (1)	84 Info Bits

M2 Subframe

X2 (1)	84 Info Bits	F1 (1)	84 Info Bits	C1 (0)	84 Info Bits	F2 (0)	84 Info Bits	C2 (0)	84 Info Bits	F3 (0)	84 Info Bits	C3 (0)	84 Info Bits	F4 (1)	84 Info Bits

M3 Subframe

P1 (0)	84 Info Bits	F1 (1)	84 Info Bits	C1 (0)	84 Info Bits	F2 (0)	84 Info Bits	C2 (0)	84 Info Bits	F3 (0)	84 Info Bits	C3 (0)	84 Info Bits	F4 (1)	84 Info Bits

M4 Subframe

P2 (0)	84 Info Bits	F1 (1)	84 Info Bits	C1 (0)	84 Info Bits	F2 (0)	84 Info Bits	C2 (0)	84 Info Bits	F3 (0)	84 Info Bits	C3 (0)	84 Info Bits	F4 (1)	84 Info Bits

M5 Subframe

M1 (0)	84 Info Bits	F1 (1)	84 Info Bits	C1 (0)	84 Info Bits	F2 (0)	84 Info Bits	C2 (0)	84 Info Bits	F3 (0)	84 Info Bits	C3 (0)	84 Info Bits	F4 (1)	84 Info Bits

M6 Subframe

M2 (1)	84 Info Bits	F1 (1)	84 Info Bits	C1 (0)	84 Info Bits	F2 (0)	84 Info Bits	C2 (0)	84 Info Bits	F3 (0)	84 Info Bits	C3 (0)	84 Info Bits	F4 (1)	84 Info Bits

M7 Subframe

M3 (0)	84 Info Bits	F1 (1)	84 Info Bits	C1 (0)	84 Info Bits	F2 (0)	84 Info Bits	C2 (0)	84 Info Bits	F3 (0)	84 Info Bits	C3 (0)	84 Info Bits	F4 (1)	84 Info Bits

Note 1: X1 is transmitted first.
Note 2: The 84 info bits contain the repetitive sequence 1010…, where the first 1 in the sequence immediately follows each X, P, F, C, or M bit.

Downloaded from Datasheet.su

10. JITTER ATTENUATOR

Each LIU contains an on-board jitter attenuator that can be placed in the receive path or the transmit path or can be disabled. The TJA and RJA pins (hardware mode) or the TCR:TJA and RCR:RJA control bits (CPU bus mode) specify how the jitter attenuator is used. Setting TJA = RJA = 0 disables the jitter attenuator. To use the jitter attenuator in the receive path, set RJA = 1 (with TJA = 0). To use it in the transmit path, set TJA = 1. Figure 10-1 shows the minimum jitter attenuation for the device when the jitter attenuator is enabled. Figure 10-1 also shows the receive jitter transfer when the jitter attenuator is disabled.

The jitter attenuator consists of a narrowband PLL to retime the selected clock, a FIFO to buffer the associated data while the clock is being retimed, and logic to prevent FIFO over/underflow in the presence of very large jitter amplitudes. In hardware mode, only 16-bit and 32-bit FIFO depths are available. See Table 6-I. In CPU bus mode, control bits TCR:JAL[1:0] set the FIFO depth to 16, 32, 64, or 128 bits.

The jitter attenuator requires a transmission-quality master clock (i.e., ±20ppm frequency accuracy and low jitter). When enabled in the receive path, the JA can obtain its master clock from the appropriate MCLK pin, from the clock adapter block, or from the TCLK pin. When enabled in the transmit path, the JA can take its master clock from the MCLK pin or from the clock adapter block, but not from the TCLK pin. The CDR block also uses the selected master clock. See Section 12 for more information about master clocks and clock selection.

The JA has a loop bandwidth of master_clock ÷ 2,058,874 (see corner frequencies in Figure 10-1). The JA attenuates jitter at frequencies higher than the loop bandwidth, while allowing jitter (and wander) at lower frequencies to pass through relatively unaffected.

In CPU bus mode the jitter attenuator indicates the fill status of its FIFO buffer in the JAFL (JA full) and JAEL (JA empty) status bits in the SRL register. The JA sets the JAFL bit to indicate that its buffer is full. When the buffer becomes full, the JA momentarily increases the frequency of the read clock by 6250 ppm to avoid buffer overflow and consequent data loss. In a similar manner, the JA sets the JAEL bit to indicate that its buffer is empty. When the buffer becomes empty, the JA momentarily decreases the frequency of the read clock by 6250 ppm to avoid buffer underflow and consequent data errors. During these momentary frequency adjustments, jitter is passed through the JA to avoid over/underflow. If the phase noise or frequency offset of the write clock is large enough to cause the buffer to overflow or underflow, the JA sets *both* the JAFL bit *and* the JAEL bit to indicate that data errors have occurred.

Downloaded from Datasheet.su

Figure 10-1. Jitter Attenuation/Jitter Transfer

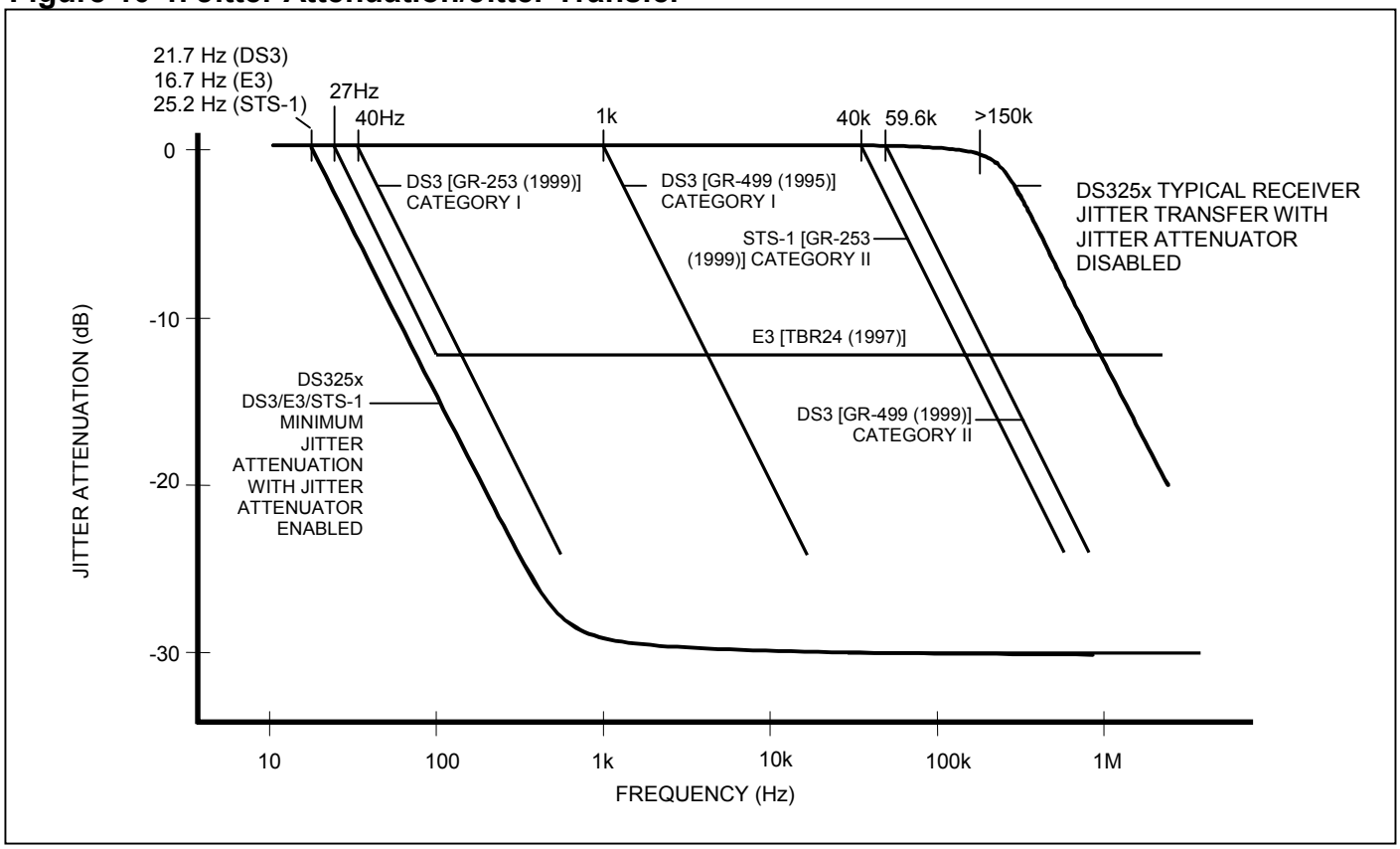

Downloaded from Datasheet.su

11. DIAGNOSTICS

11.1 PRBS Generator and Detector

Each LIU has built-in pseudorandom bit sequence (PRBS) generator and detector circuitry for physical layer testing. The device generates and detects unframed 2^{15} - 1 (DS3 or STS-1) or 2^{23} - 1 PRBS, according to the ITU O.151 specification. To transmit a PRBS pattern, pull the TDSA and TDSB pins high (hardware mode) or set configuration bits TDSA and TDSB in the GCR register (CPU bus mode). As Table 6-G shows, the PRBS generator automatically generates 2^{15} - 1 for DS3 and STS-1 modes and 2^{23} - 1 for E3 mode.

The PRBS detector, which is always enabled (Table 6-H), reports its status through the PRBS output pin (hardware and CPU bus modes) or through the PRBS and PBER status bits (CPU bus mode). When the PRBS detector is out of synchronization, the PRBS pin is forced high. When the detector syncs to an incoming PRBS pattern, the PRBS pin is driven low, then pulses high, synchronous with RCLK, for each bit error detected. See Figure 11-1 and Figure 11-2 for details. In CPU bus mode, the PRBS status bit is set to one when the detector is out of synchronization and set to zero when the detector syncs to an incoming PRBS pattern. A change of state of the PRBS bit sets the PRBSL bit in the SRL register and can also cause an interrupt on the $\overline{\text{INT}}$ pin if the PRBSIE bit in the SRIE register is set to one. A pattern bit error set the PBERL bit in the SRL register and can also cause an interrupt if the PBERIE bit in the SRIE register is set to one.

Figure 11-1. PRBS Output with Normal RCLK Operation

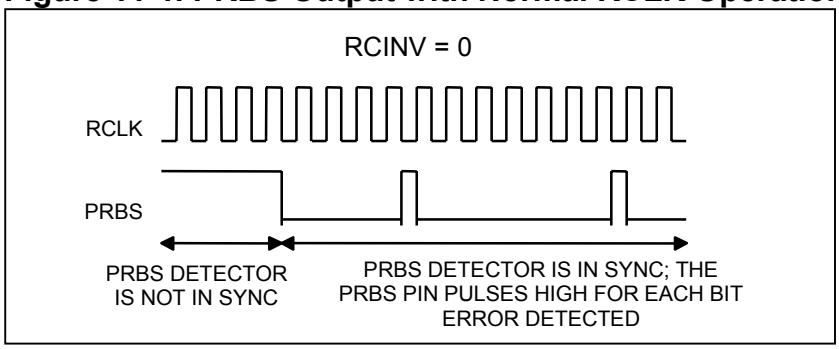

Figure 11-2. PRBS Output with Inverted RCLK Operation

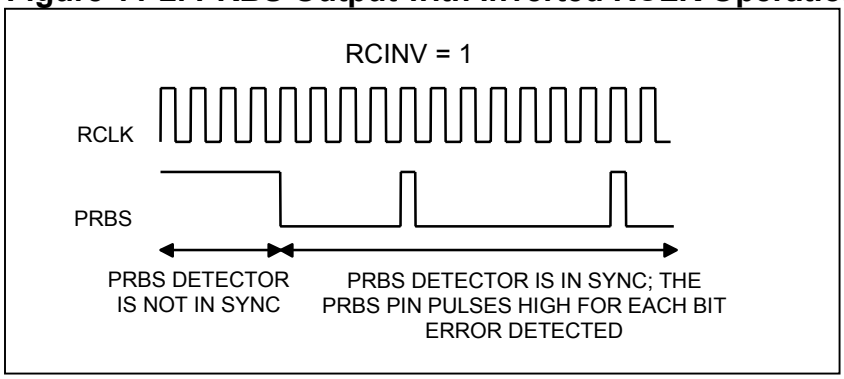

11.2 Loopbacks

Each LIU has three internal loopbacks. See Figure 4-1 and Figure 4-2. The LLB and RLB pins (hardware mode) or LLB and RLB control bits in the GCR register (CPU bus mode) enable these loopbacks. When LLB = RLB = 0, loopbacks are disabled. Setting RLB = 1 with LLB = 0 enables remote loopback, which loops recovered clock and data back through the LIU transmitter. During remote loopback, recovered clock and data are output on RCLK, RPOS/RDAT, and RNEG/RLCV, but the TPOS/TDAT and TNEG pins are ignored. Setting LLB = 1 with RLB = 0 enables analog local loopback, which loops the outgoing transmit signal back to the receiver's analog front end. Setting LLB = RLB = 1 enables digital local loopback, which loops digital transmit clock and data back to the receiver's digital circuitry, including the LOS detector, the B3ZS/HDB3 decoder, and the PRBS detector. When either of the local loopbacks is enabled, the transmit signal is output normally on TXP/TXN, but the received signal on RXP/RXN is ignored.

Downloaded from Datasheet.su

12. CLOCK ADAPTER

The clock adapter block generates all required clock rates from a single input clock. If a transmission-quality clock of one line rate (DS3, E3 or STS-1) is present, the clock adapter can synthesize transmission-quality clocks at the other two line rates. Both input clocks and synthesized clocks are then available to be used as master clocks by the CDRs and jitter attenuators. In hardware mode the clock adapter is entirely controlled by the T3MCLK, E3MCLK and STMCLK pins. See the pins descriptions for those pins in Table 6-A.

In CPU bus mode additional clock adapter control options are available in the CACR register. When control bit AMCEN is set to 1, the clock adapter block is configured for alternate master clock mode. In this mode, the clock adapter expects to receive a clock whose frequency is specified by the AMCSEL[1:0] control bits rather than a DS3, E3 or STS-1 clock. Valid input frequencies are 19.44 MHz, 38.88 MHz and 77.76 MHz. In alternate master clock mode the clock adapter can synthesize up to two clock rates (DS3, E3 or STS-1). To synthesize DS3 and E3 clocks, the alternate master clock should be applied to the STMCLK pin. To synthesize DS3 and STS-1 clocks, the clock should be applied to the E3MCLK pin. To synthesize E3 and STS-1 clocks, the clock should be applied to the T3MCLK pin. The device can be powered up with an alternate clock applied to one of the MCLK pins, even though the power-on default values of AMCEN and AMCSEL[1:0] may not match the applied clock. Once these control bits are properly set after power-up, the clock adapter begins to synthesize the proper master clocks, and the device as a whole functions normally.

CPU bus mode also provides the ability to output synthesized master clocks on the T3MCLK, E3MCLK and STMCLK pins for use by neighboring framers, mappers and other components. To output the synthesized DS3 master clock on T3MCLK, set CACR:T3MOE=1. To output the synthesized E3 master clock on E3MCLK, set CACR:E3MOE=1. To output the synthesized STS-1 master clock on STMCLK, set CACR:STMOE=1.

13. RESET LOGIC

There are four sources for reset: an internal power-on reset (POR) circuit, the reset pin $\overline{\text{RST}}$, the JTAG reset pin $\overline{\text{JTRST}}$, and the RST bit in each LIU's global configuration register (GCR). The chip is divided into three zones for reset: the digital logic, the analog circuits, and the JTAG logic. The digital logic includes the status and control registers, the B3ZS/HDB3 encoder and decoder, the PRBS generator and detector, and the LOS detect logic. The analog circuits include clock and data recovery, jitter attenuator, and transmit waveform generation. The JTAG logic consists of the common boundary scan controller and the boundary scan cells at each pin.

The POR circuit resets the digital logic, analog circuits, and JTAG logic zones. The $\overline{\text{RST}}$ pin resets the digital logic and the analog circuits but not the JTAG logic. The $\overline{\text{JTRST}}$ pin resets only the JTAG logic. Each LIU's RST register bit resets the digital logic for that LIU, including resetting the LIU's registers to the default state (except for the RST bit itself).

The POR signal and $\overline{\text{RST}}$ pin require an active master clock source for the LIU to properly reset.

Downloaded from Datasheet.su

14. TRANSFORMERS

Table 14-A. Transformer Characteristics

PARAMETER	VALUE
Turns Ratio	1:2ct ±2%
Bandwidth 75Ω	0.250MHz to 500MHz (typ)
Primary Inductance	19µH (min)
Leakage Inductance	0.150µH (max)
Interwinding Capacitance	10pF (max)
Isolation Voltage	$1500V_{RMS}$ (min)

Table 14-B. Recommended Transformers

MANUFACTURER	NO. OF TRANSFORMERS	PART	TEMP RANGE	PIN-PACKAGE/ SCHEMATIC
Pulse Engineering	1	PE-65968	0°C to +70°C	6 SMT LS-1/C
	1	PE-65969	0°C to +70°C	6 Thru-Hole LC-1/C
	8	T3049	0°C to +70°C	32 SMT YB/1
Halo Electronics	1	TG07-0206NS	0°C to +70°C	6 SMT SMD/B
	1	TD07-0206NE	0°C to +70°C	6 DIP DIP/B

Note: *Table subject to change. Industrial temperature range and multiport transformers are also available. Contact the manufacturers for details at www.pulseeng.com and www.haloelectronics.com.*

Downloaded from Datasheet.su

15. CPU INTERFACES

When the HW pin is logic 0 the device is in CPU bus mode. The default CPU interface is 8-bit parallel.

15.1 Parallel Interface

When the device is in CPU bus mode, by default it presents a generic 8-bit parallel microprocessor interface. When the MOT pin is logic 1, the interface is Motorola-style with $\overline{CS}$, R/$\overline{W}$, and $\overline{DS}$ control lines. When MOT = 0, the interface is Intel-style with $\overline{CS}$, $\overline{RD}$, and $\overline{WR}$ control lines. In both styles, the interface supports both multiplexed and nonmultiplexed operation. For multiplexed operation, wire A[5:0] to D[5:0], wire D[7:0] to the CPU's multiplexed address/data bus, and connect the ALE pin to the appropriate pin on the micro. For nonmultiplexed operation, wire ALE high and wire A[5:0] and D[7:0] to the appropriate pins on the micro. See Table 17-H, Figure 17-3 and Figure 17-4 for parallel interface timing diagrams and parameters.

15.2 SPI Interface

When the MOT, $\overline{RD}$, and $\overline{WR}$ pins are all low, the device presents an SPI interface on the $\overline{CS}$, SCLK, SDI, and SDO pins. SPI is a widely-used master/slave bus protocol that allows a master device and one or more slave devices to communicate over a serial bus. The DS325x is always a slave device. Masters are typically microprocessors, ASICs or FPGAs. Data transfers are always initiated by the master device, which also generates the SCLK signal. The DS325x receives serial data on the SDI pin and transmits serial data on the SDO pin. SDO is high-impedance except when the DS325x is transmitting data to the bus master.

Clock Polarity and Phase. The CPOL pin defines the polarity of SCLK. When CPOL = 0, SCLK is normally low and pulses high during bus transactions. When CPOL = 1, SCLK is normally high and pulses low during bus transactions. the CPHA pin sets the phase (active edge) of SCLK. When CPHA = 0, data is latched in on SDI on the leading edge of the SCLK pulse and updated on SDO on the trailing edge. When CPHA = 1, data is latched in on SDI on the trailing edge of the SCLK pulse and updated on SDO on the following leading edge. See Figure 15-1.

Bit Order. The control byte and all data bytes are transmitted MSB first on both SDI and SDO.

Device Selection. Each SPI device has its own chip-select line. To select the DS325x, pull its $\overline{CS}$ pin low.

Control Byte. After $\overline{CS}$ is pulled low, the bus master transmits the control byte during the first eight SCLK cycles. The control byte has the form R/$\overline{W}$ A5 A4 A3 A2 A1 A0 BURST, where A[5:0] is the register address, R/$\overline{W}$ is the data direction bit (1 = read, 0 = write), and BURST is the burst bit (1 = burst access, 0 = single-byte access). In the discussion that follows, a control byte with R/$\overline{W}$ = 1 is a read control byte, while a control byte with R/$\overline{W}$ = 0 is a write control byte.

Single-Byte Writes. See Figure 15-2. After $\overline{CS}$ goes low, the bus master transmits a write control byte with BURST = 0 followed by the data byte to be written. The bus master then terminates the transaction by pulling $\overline{CS}$ high.

Single-Byte Reads. See Figure 15-2. After $\overline{CS}$ goes low, the bus master transmits a read control byte with BURST = 0. The DS325x then responds with the requested data byte. The bus master then terminates the transaction by pulling $\overline{CS}$ high.

Burst Writes. See Figure 15-2. After $\overline{CS}$ goes low, the bus master transmits a write control byte with BURST = 1 followed by the first data byte to be written. The DS325x receives the first data byte on SDI, writes it to the specified register, increments its internal address register, and prepares to receive the next data byte. If the master continues to transmit, the DS325x continues to write the data received and increment its address counter. After the address counter reaches FFh it rolls over to address 00h and continues to increment.

Burst Reads. See Figure 15-2. After $\overline{CS}$ goes low, the bus master transmits a read control byte with BURST = 1. The DS325x then responds with the requested data byte on SDO, increments its address counter, and pre-fetches the next data byte. If the bus master continues to demand data, the DS325x continues to provide the data on SDO, increment its address counter, and pre-fetch the following byte. After the address counter reaches FFh it rolls over to address 00h and continues to increment.

Downloaded from Datasheet.su

Early Termination of Bus Transactions. The bus master can terminate SPI bus transactions at any time by pulling $\overline{CS}$ high. In response to early terminations, the DS325x resets its SPI interface logic and waits for the start of the next transaction. If a write transaction is terminated prior to the SCLK edge that latches the LSB of a data byte, the current data byte is not written.

Design Option: Wiring SDI and SDO Together. Because communication between the bus master and the DS325x is half-duplex, the SDI and SDO pins can be wired together externally to reduce wire count. To support this option, the bus master must not drive the SDI/SDO line when the DS325x is transmitting.

AC Timing. See Table 17-I and Figure 17-5 for AC timing specifications for the SPI interface.

Figure 15-1. SPI Clock Polarity and Phase Options

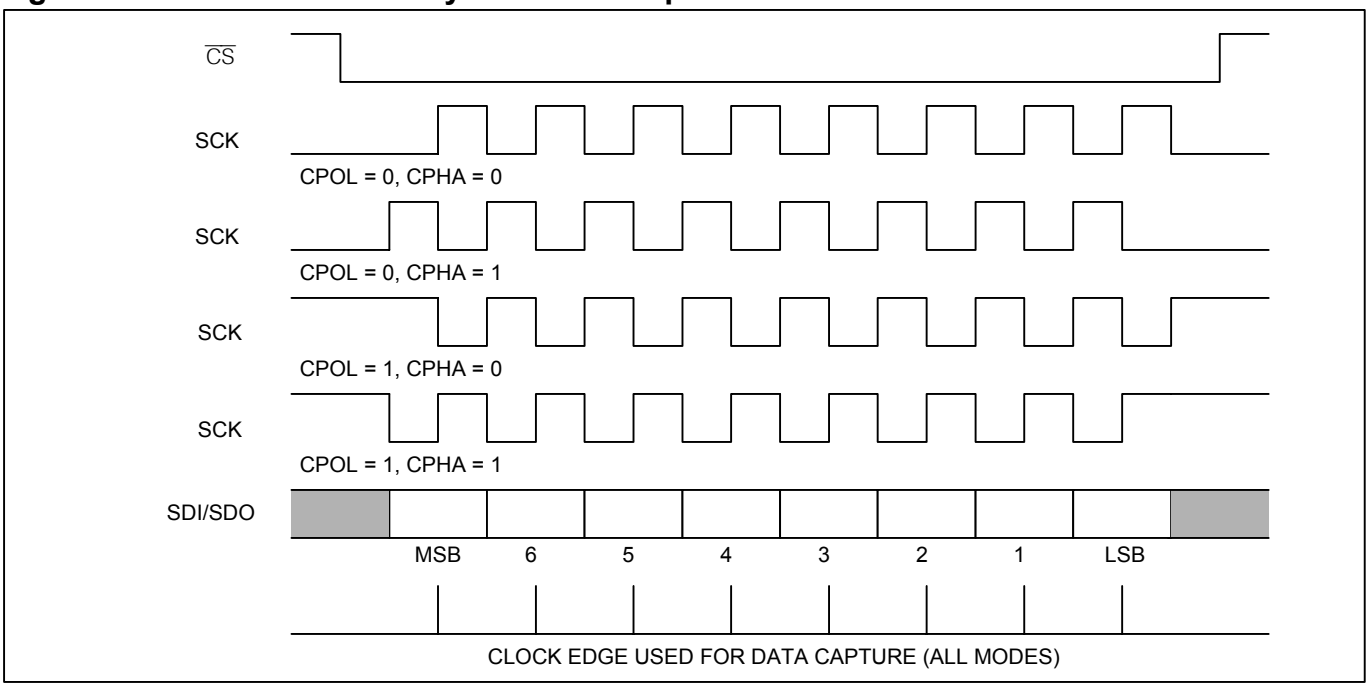

Downloaded from Datasheet.su

Figure 15-2. SPI Bus Transactions

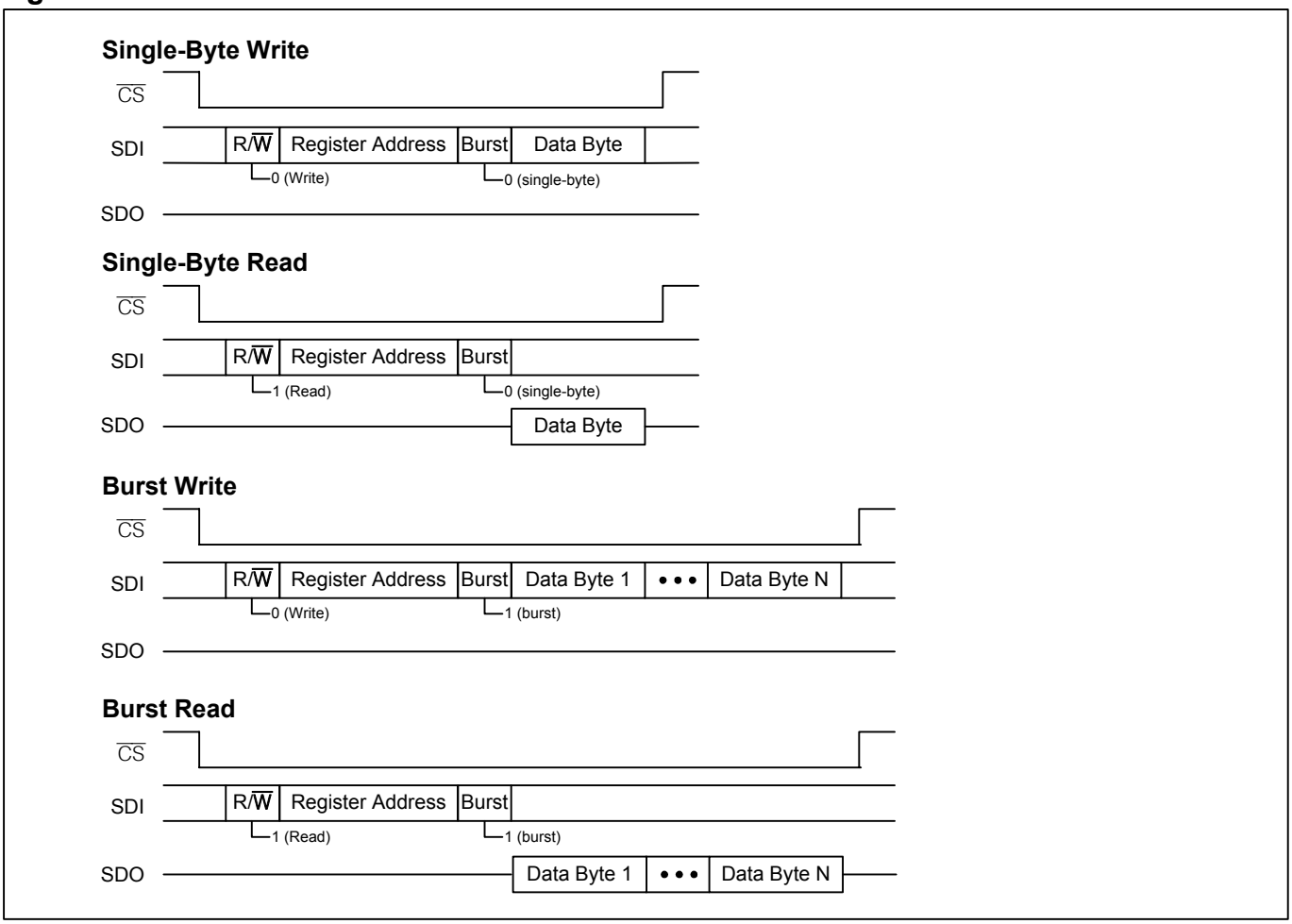

Downloaded from Datasheet.su

16. JTAG TEST ACCESS PORT AND BOUNDARY SCAN

16.1 JTAG Description

The DS325x LIUs support the standard instruction codes SAMPLE/PRELOAD, BYPASS, and EXTEST. Optional public instructions included are HIGHZ, CLAMP, and IDCODE. Figure 16-1 features a block diagram. The LIUs contain the following items, which meet the requirements set by the IEEE 1149.1 Standard Test Access Port and Boundary Scan Architecture:

Test Access Port (TAP)	Bypass Register
TAP Controller	Boundary Scan Register
Instruction Register	Device Identification Register

The TAP has the necessary interface pins, namely JTCLK, $\overline{\text{JTRST}}$, JTDI, JTDO, and JTMS. Details on these pins can be found in Table 6-A. Details about the boundary scan architecture and the TAP can be found in IEEE 1149.1-1990, IEEE 1149.1a-1993, and IEEE 1149.1b-1994.

16.2 JTAG TAP Controller State Machine Description

This section discusses the operation of the TAP controller state machine. The TAP controller is a finite state machine that responds to the logic level at JTMS on the rising edge of JTCLK. Each of the states denoted in Figure 16-2 are described in the following pages.

Test-Logic-Reset. Upon device power-up, the TAP controller starts in the Test-Logic-Reset state. The instruction register contains the IDCODE instruction. All system logic on the device operates normally.

Run-Test-Idle. Run-Test-Idle is used between scan operations or during specific tests. The instruction and test registers remain idle.

Select-DR-Scan. All test registers retain their previous state. With JTMS low, a rising edge of JTCLK moves the controller into the Capture-DR state and initiates a scan sequence. JTMS high moves the controller to the Select-IR-SCAN state.

Capture-DR. Data can be parallel loaded into the test data registers selected by the current instruction. If the instruction does not call for a parallel load or the selected register does not allow parallel loads, the test register remains at its current value. On the rising edge of JTCLK, the controller goes to the Shift-DR state if JTMS is low or to the Exit1-DR state if JTMS is high.

Shift-DR. The test data register selected by the current instruction is connected between JTDI and JTDO and shifts data one stage toward its serial output on each rising edge of JTCLK. If a test register selected by the current instruction is not placed in the serial path, it maintains its previous state.

Exit1-DR. While in this state, a rising edge on JTCLK with JTMS high puts the controller in the Update-DR state, which terminates the scanning process. A rising edge on JTCLK with JTMS low puts the controller in the Pause-DR state.

Pause-DR. Shifting of the test registers is halted while in this state. All test registers selected by the current instruction retain their previous state. The controller remains in this state while JTMS is low. A rising edge on JTCLK with JTMS high puts the controller in the Exit2-DR state.

Exit2-DR. While in this state, a rising edge on JTCLK with JTMS high puts the controller in the Update-DR state and terminates the scanning process. A rising edge on JTCLK with JTMS low puts the controller in the Shift-DR state.

Update-DR. A falling edge on JTCLK while in the Update-DR state latches the data from the shift register path of the test registers into the data output latches. This prevents changes at the parallel output because of changes in the shift register. A rising edge on JTCLK with JTMS low puts the controller in the Run-Test-Idle state. With JTMS high, the controller enters the Select-DR-Scan state.

Select-IR-Scan. All test registers retain their previous state. The instruction register remains unchanged during this state. With JTMS low, a rising edge on JTCLK moves the controller into the Capture-IR state and initiates a scan

Downloaded from Datasheet.su

sequence for the instruction register. JTMS high during a rising edge on JTCLK puts the controller back into the Test-Logic-Reset state.

Capture-IR. The Capture-IR state is used to load the shift register in the instruction register with a fixed value. This value is loaded on the rising edge of JTCLK. If JTMS is high on the rising edge of JTCLK, the controller enters the Exit1-IR state. If JTMS is low on the rising edge of JTCLK, the controller enters the Shift-IR state.

Shift-IR. In this state, the instruction register's shift register is connected between JTDI and JTDO and shifts data one stage for every rising edge of JTCLK toward the serial output. The parallel register and the test registers remain at their previous states. A rising edge on JTCLK with JTMS high moves the controller to the Exit1-IR state. A rising edge on JTCLK with JTMS low keeps the controller in the Shift-IR state, while moving data one stage through the instruction shift register.

Exit1-IR. A rising edge on JTCLK with JTMS low puts the controller in the Pause-IR state. If JTMS is high on the rising edge of JTCLK, the controller enters the Update-IR state and terminates the scanning process.

Pause-IR. Shifting of the instruction register is halted temporarily. With JTMS high, a rising edge on JTCLK puts the controller in the Exit2-IR state. The controller remains in the Pause-IR state if JTMS is low during a rising edge on JTCLK.

Exit2-IR. A rising edge on JTCLK with JTMS high puts the controller in the Update-IR state. The controller loops back to the Shift-IR state if JTMS is low during a rising edge of JTCLK in this state.

Update-IR. The instruction shifted into the instruction shift register is latched into the parallel output on the falling edge of JTCLK as the controller enters this state. Once latched, this instruction becomes the current instruction. A rising edge on JTCLK with JTMS low puts the controller in the Run-Test-Idle state. With JTMS high, the controller enters the Select-DR-Scan state.

Figure 16-1. JTAG Block Diagram

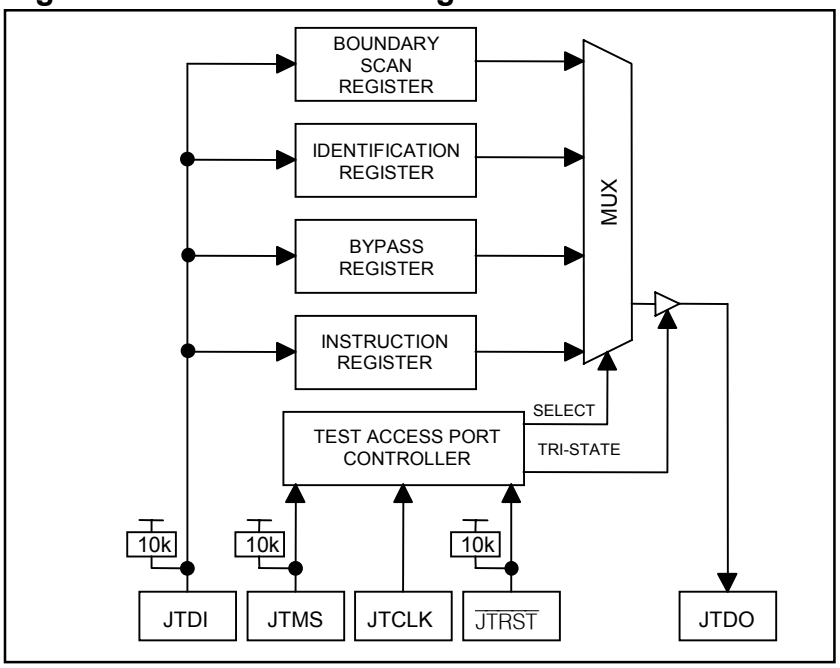

Downloaded from Datasheet.su

Figure 16-2. JTAG TAP Controller State Machine

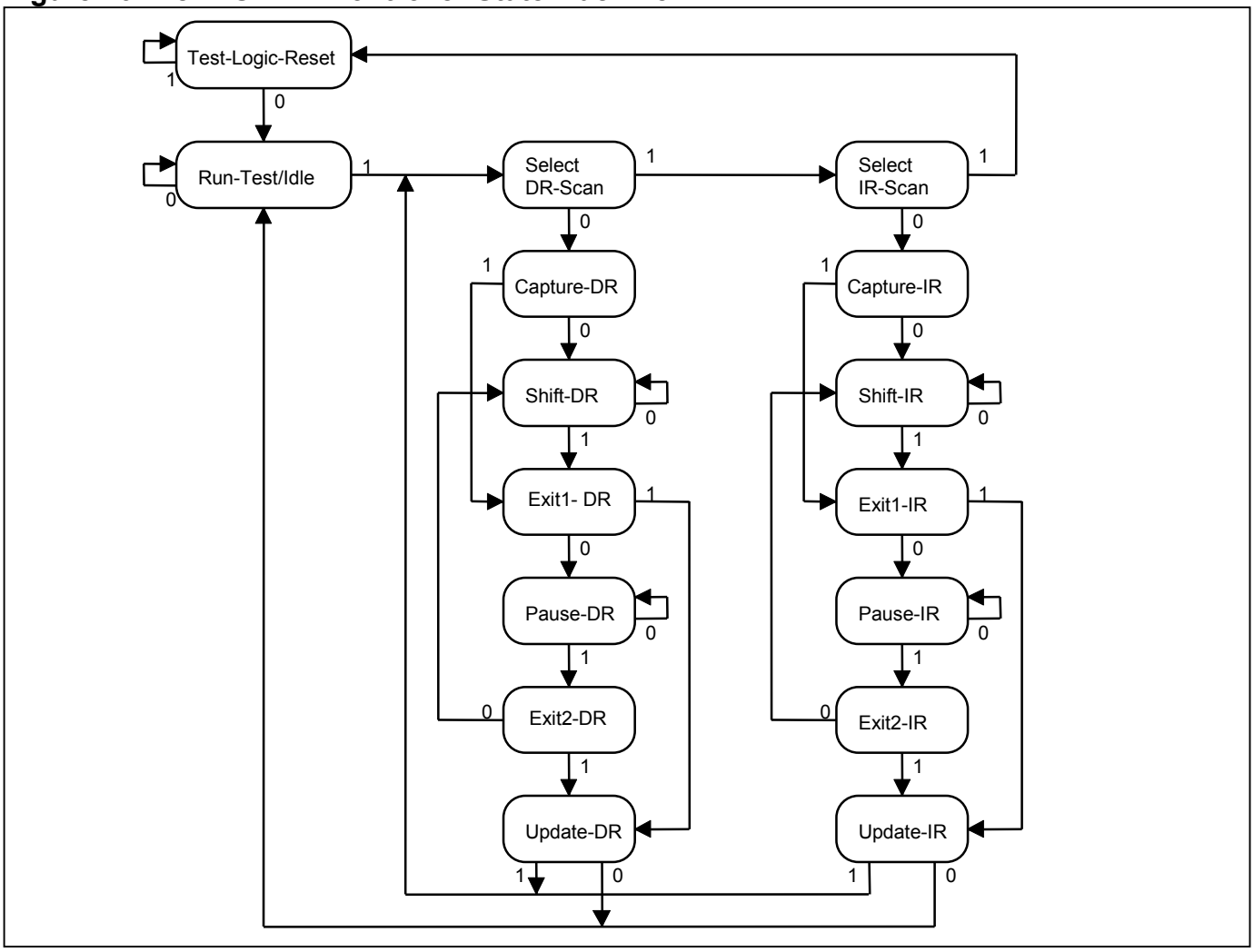

16.3 JTAG Instruction Register and Instructions

The instruction register contains a shift register as well as a latched parallel output and is 3 bits in length. When the TAP controller enters the Shift-IR state, the instruction shift register is connected between JTDI and JTDO. While in the Shift-IR state, a rising edge on JTCLK with JTMS low shifts data one stage toward the serial output at JTDO. A rising edge on JTCLK in the Exit1-IR state or the Exit2-IR state with JTMS high moves the controller to the Update-IR state. The falling edge of that same JTCLK latches the data in the instruction shift register to the instruction parallel output. Table 16-A shows the instructions supported by the DS325x and their respective operational binary codes.

Table 16-A. JTAG Instruction Codes

INSTRUCTIONS	SELECTED REGISTER	INSTRUCTION CODES
SAMPLE/PRELOAD	Boundary Scan	010
BYPASS	Bypass	111
EXTEST	Boundary Scan	000
CLAMP	Bypass	011
HIGHZ	Bypass	100
IDCODE	Device Identification	001

Downloaded from Datasheet.su

SAMPLE/PRELOAD. SAMPLE/RELOAD is a mandatory instruction for the IEEE 1149.1 specification. This instruction supports two functions. The digital I/Os of the device can be sampled at the boundary scan register without interfering with the device's normal operation by using the Capture-DR state. SAMPLE/PRELOAD also allows the DS325x to shift data into the boundary scan register through JTDI using the Shift-DR state.

EXTEST. EXTEST allows testing of the interconnections to the device. When the EXTEST instruction is latched in the instruction register, the following actions occur. Once enabled through the Update-IR state, the parallel outputs of the digital output pins are driven. The boundary scan register is connected between JTDI and JTDO. The Capture-DR samples all digital inputs into the boundary scan register.

BYPASS. When the BYPASS instruction is latched into the parallel instruction register, JTDI connects to JTDO through the 1-bit bypass test register. This allows data to pass from JTDI to JTDO without affecting the device's normal operation.

IDCODE. When the IDCODE instruction is latched into the parallel instruction register, the identification test register is selected. The device identification code is loaded into the identification register on the rising edge of JTCLK, following entry into the Capture-DR state. Shift-DR can be used to shift the identification code out serially through JTDO. During Test-Logic-Reset, the identification code is forced into the instruction register's parallel output.

HIGHZ. All digital outputs are placed into a high-impedance state. The bypass register is connected between JTDI and JTDO.

CLAMP. All digital output pins output data from the boundary scan parallel output while connecting the bypass register between JTDI and JTDO. The outputs do not change during the CLAMP instruction.

Table 16-B. JTAG ID Code

PART	REVISION	DEVICE CODE	MANUFACTURER CODE	REQUIRED
DS3251	Consult factory	0000000000101100	00010100001	1
DS3252	Consult factory	0000000000101101	00010100001	1
DS3253	Consult factory	0000000000101110	00010100001	1
DS3254	Consult factory	0000000000101111	00010100001	1

16.4 JTAG Test Registers

IEEE 1149.1 requires a minimum of two test registers—the bypass register and the boundary scan register. An optional test register, the identification register, has been included in the device design. It is used with the IDCODE instruction and the Test-Logic-Reset state of the TAP controller.

Bypass Register. This is a single 1-bit shift register used with the BYPASS, CLAMP, and HIGHZ instructions, which provide a short path between JTDI and JTDO.

Boundary Scan Register. This register contains a shift register path and a latched parallel output for control cells and digital I/O cells. DS325x BSDL files are available at www.maxim-ic.com/TechSupport/telecom/bsdl.htm.

Identification Register. This register contains a 32-bit shift register and a 32-bit latched parallel output. It is selected during the IDCODE instruction and when the TAP controller is in the Test-Logic-Reset state.

Downloaded from Datasheet.su

17. ELECTRICAL CHARACTERISTICS

ABSOLUTE MAXIMUM RATINGS

Voltage Range on Any Lead with Respect to V_{SS} (except V_{DD})…….-0.3V to +5.5V
Supply Voltage Range (V_{DD}) with Respect to V_{SS}……..-0.3V to +3.63V
Ambient Operating Temperature Range……..-40°C to +85°C
Junction Operating Temperature Range……-40°C to +125°C
Storage Temperature Range……...-55°C to +125°C
Soldering Temperature…….See IPC/JEDEC J-STD-020 Specification

Stresses beyond those listed under "Absolute Maximum Ratings" may cause permanent damage to the device. These are stress ratings only, and functional operation of the device at these or any other conditions beyond those indicated in the operational sections of the specifications is not implied. Exposure to the absolute maximum rating conditions for extended periods may affect device. Ambient operating temperature range when device is mounted on a four-layer JEDEC test board with no airflow.

***Note:** The typical values listed in Tables 17-A through 17-J are not production tested.*

Table 17-A. Recommended DC Operating Conditions

(T_A = -40°C to +85°C)

PARAMETER	SYMBOL	CONDITIONS	MIN	TYP	MAX	UNITS
Supply Voltage	V_{DD}		3.135	3.3	3.465	V
Logic 1, All Other Input Pins	V_{IH}		2.0		5.5	V
Logic 0, All Other Input Pins	V_{IL}		-0.3		+0.8	V

Table 17-B. DC Characteristics

(V_{DD} = 3.3V ±5%, T_A = -40°C to +85°C.)

PARAMETER	SYMBOL	CONDITIONS	MIN	TYP	MAX	UNITS
Supply Current (Note 1)	I_{DD}	DS3251		80	120	mA
		DS3252		150	200	
		DS3253		220	280	
		DS3254		290	360	
Supply Current, Transmitters Tri-Stated (All $\overline{TTSn}$ Low) (Note 2)	I_{DDTTS}	DS3251		60	100	mA
		DS3252		110	160	
		DS3253		160	220	
		DS3254		210	280	
Power-Down Current (All TPD, RPD Control Bits High)	I_{DDPD}	DS325x (Note 2)		35	50	mA
Lead Capacitance	C_{IO}			7	10	pF
Input Leakage, All Other Input Pins	I_{IL}	(Note 3)	-50		+10	µA
Output Leakage (when High-Z)	I_{LO}	(Note 3)	-10		+10	µA
Output Voltage (I_O = -4.0mA)	V_{OH}		2.4		V_{DD}	V
Output Voltage (I_O = +4.0mA)	V_{OL}		0		0.4	V

Note 1: TCLKn = STMCLK = 51.84MHz; TXPn/TXNn driving all ones into 75Ω resistive loads; analog loopback enabled; all other inputs at V_{DD} or grounded; all other outputs open.

Note 2: TCLKn = STMCLK = 51.84MHz; other inputs at V_{DD} or grounded; digital outputs left open circuited.

Note 3: 0V < V_{IN} < V_{DD} for all other digital inputs.

Downloaded from Datasheet.su

Table 17-C. Framer Interface Timing

(V_{DD} = 3.3V ±5%, T_A = -40°C to +85°C.) (Figure 17-1 and Figure 17-2)

PARAMETER	SYMBOL	CONDITIONS	MIN	TYP	MAX	UNITS
RCLK/TCLK Clock Period	t1	(Note 1)		22.4		ns
		(Note 2)		29.1		
		(Note 3)		19.3		
RCLK Duty Cycle	t2/t1, t3/t1	(Notes 4, 5)	45	50	55	%
TCLK Duty Cycle	t2/t1, t3/t1	(Note 5)	30		70	%
MCLK Duty Cycle	t2/t1, t3/t1	(Note 5)	30		70	%
TPOS/TDAT, TNEG to TCLK Setup Time	t4	(Notes 5, 6)	2			ns
TPOS/TDAT, TNEG Hold Time	t5	(Notes 5, 6)	2			ns
RCLK to RPOS/RDAT, RNEG/RLCV, and PRBS Value Change	t6	(Notes 4, 5, 7)	2		6	ns
RCLK Rise and Fall Time	t7	(Notes 5, 8)		3	5	ns
TCLK Rise and Fall Time	t8	(Notes 5, 9)			5	ns

Note 1: DS3 mode.
Note 2: E3 mode.
Note 3: STS-1 mode.
Note 4: Outputs loaded with 25pF, measured at 50% threshold.
Note 5: Not tested during production test.
Note 6: When TCINV = 0, TPOS/TDAT and TNEG are sampled on the rising edge of TCLK. When TCINV = 1, TPOS/TDAT and TNEG are sampled on the falling edge of TCLK.
Note 7: When RCINV = 0, RPOS/RDAT and RNEG/RLCV are updated on the falling edge of RCLK. When RCINV = 1, RPOS/RDAT and RNEG/RLCV are updated on the rising edge of RCLK.
Note 8: Outputs loaded with 25pF, measured between V_{OL} (max) and V_{OH} (min).
Note 9: Measured between V_{IL} (max) and V_{IH} (min).

Downloaded from Datasheet.su

Figure 17-1. Transmitter Framer Interface Timing Diagram

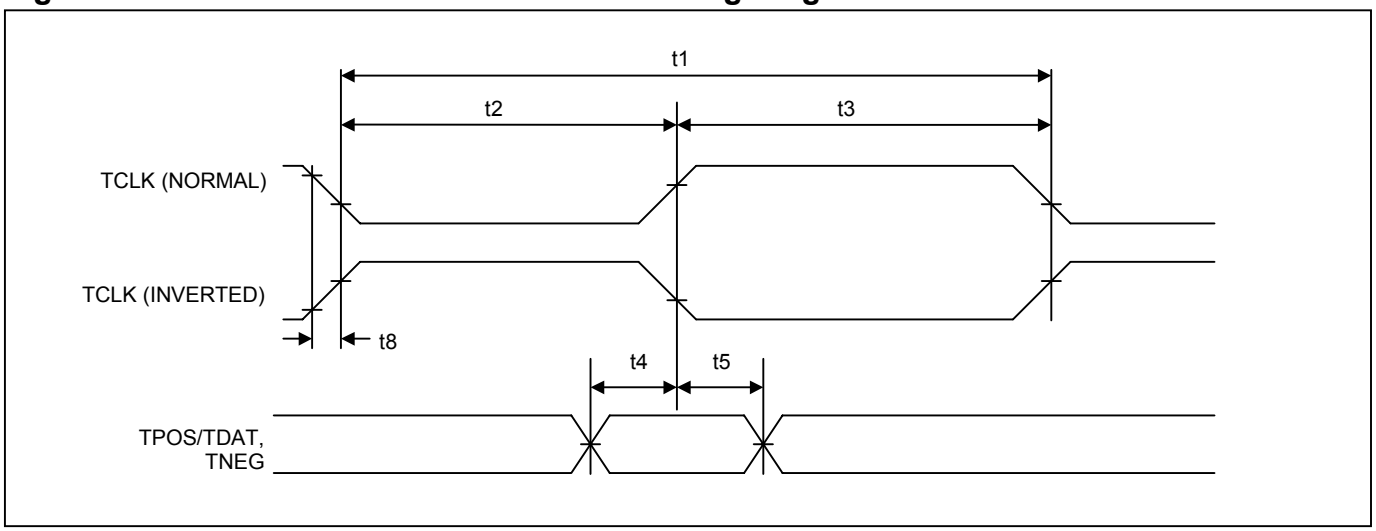

Figure 17-2. Receiver Framer Interface Timing Diagram

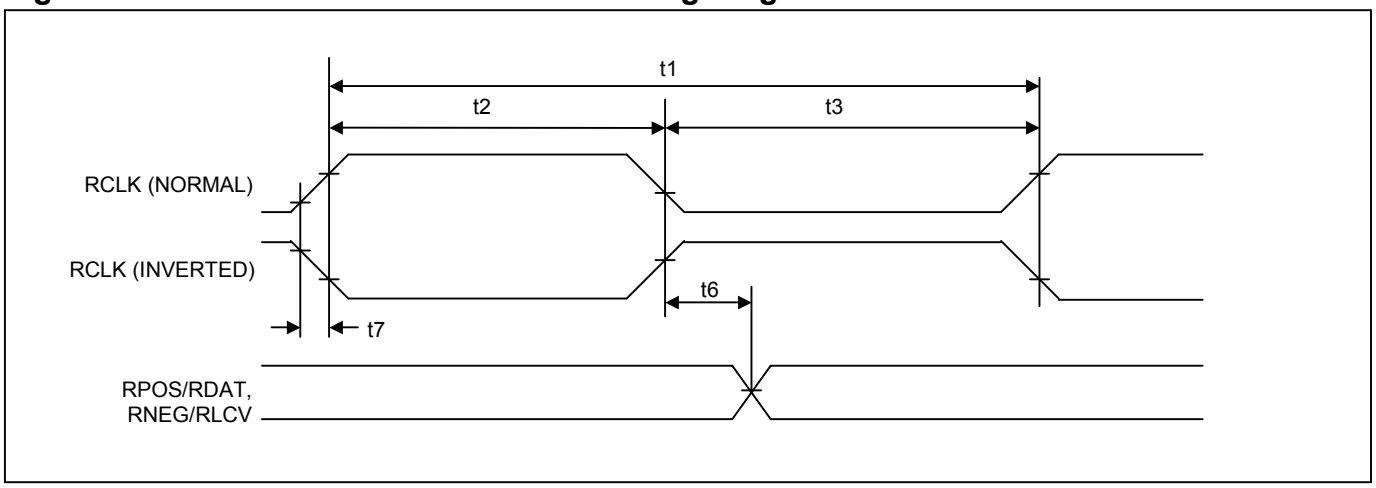

Downloaded from Datasheet.su

Table 17-D. Receiver Input Characteristics—DS3 and STS-1 Modes

(V_{DD} = 3.3V ±5%, T_A = -40°C to +85°C.)

PARAMETER	MIN	TYP	MAX	UNITS
Receive Sensitivity (Length of Cable)	900	1200		ft
Signal-to-Noise Ratio, Interfering Signal Test (Notes 1, 2)		10		
Input Pulse Amplitude, RMON = 0 (Notes 2, 3)			1000	mVpk
Input Pulse Amplitude, RMON = 1 (Note 2, 3)			200	mVpk
Analog LOS Declare, RMON = 0 (Note 4)		-24		dB
Analog LOS Clear, RMON = 0 (Note 4)		-21		dB
Analog LOS Declare, RMON = 1 (Note 4)		-38		dB
Analog LOS Clear, RMON = 1 (Note 4)		-35		dB
Intrinsic Jitter Generation (Note 2)		0.03		UI_{P-P}

Note 1: An interfering signal (2^{15} - 1 PRBS, B3ZS encoded, compliant waveshape, nominal bit rate) is added to the input signal. The combined signal is passed through 0 to 900 feet of coaxial cable and presented to the DS325x receiver. This spec indicates the lowest signal-to-noise ratio that results in a bit error ratio $\leq 10^{-9}$.

Note 2: Not tested during production test.

Note 3: Measured on the line side (i.e., the BNC connector side) of the 1:2 receive transformer (Figure 2-1). During measurement, incoming data traffic is unframed 2^{15} - 1 PRBS.

Note 4: With respect to nominal 800mVpk signal.

Table 17-E. Receiver Input Characteristics—E3 Mode

(V_{DD} = 3.3V ±5%, T_A = -40°C to +85°C.)

PARAMETER	MIN	TYP	MAX	UNITS
Receive Sensitivity (Length of Cable)	900	1200		ft
Signal-to-Noise Ratio, Interfering Signal Test (Notes 1, 2)		12		
Input Pulse Amplitude, RMON = 0 (Notes 2, 3)			1300	mVpk
Input Pulse Amplitude, RMON = 1 (Notes 2, 3)			260	mVpk
Analog LOS Declare, RMON = 0 (Note 4)		-24		dB
Analog LOS Clear, RMON = 0 (Note 4)		-21		dB
Analog LOS Declare, RMON = 1 (Note 4)		-38		dB
Analog LOS Clear, RMON = 1 (Note 4)		-35		dB
Intrinsic Jitter Generation (Note 2)		0.03		UI_{P-P}

Note 1: An interfering signal (2^{23} - 1 PRBS, HDB3 encoded, compliant waveshape, nominal bit rate) is added to the input signal. The combined signal is passed through 0 to 900 feet of coaxial cable and presented to the DS325x receiver. This spec indicates the lowest signal-to-noise ratio that results in a bit error ratio $\leq 10^{-9}$.

Note 2: Not tested during production test.

Note 3: Measured on the line side (i.e., the BNC connector side) of the 1:2 receive transformer (Figure 2-1). During measurement, incoming data traffic is unframed 2^{23} - 1 PRBS.

Note 4: With respect to nominal 1000mVpk signal.

Downloaded from Datasheet.su

Table 17-F. Transmitter Output Characteristics—DS3 and STS-1 Modes

(V_{DD} = 3.3V ±5%, T_A = -40°C to +85°C.)

PARAMETER	MIN	TYP	MAX	UNITS
DS3 Output Pulse Amplitude, TLBO = 0 (Note 1)	700	800	900	mVpk
DS3 Output Pulse Amplitude, TLBO = 1 (Note 1)	520	700	800	mVpk
STS-1 Output Pulse Amplitude, TLBO = 0 (Note 1)	700	800	1100	mVpk
STS-1 Output Pulse Amplitude, TLBO = 1 (Note 1)	520	700	850	mVpk
Ratio of Positive and Negative Pulse-Peak Amplitudes	0.9		1.1	
DS3 Power Level at 22.368MHz (Note 2)	-1.8		+5.7	dBm
DS3 Power Level at 44.736MHz vs. Power Level at 22.368MHz (Note 2)			-20	dB
Intrinsic Jitter Generation (Note 3)		0.02	0.05	UI_{P-P}
Transmit Driver Monitor Minimum Threshold (V_{TXMIN}), TLBO = 0		550		mVpk
Transmit Driver Monitor Minimum Threshold (V_{TXMIN}), TLBO = 1		500		mVpk
Transmit Driver Monitor Maximum Threshold (V_{TXMAX}), TLBO = 0		1050		mVpk
Transmit Driver Monitor Maximum Threshold (V_{TXMAX}), TLBO = 1		800		mVpk

Note 1: Measured on the line side (i.e., the BNC connector side) of the 2:1 transmit transformer (Figure 2-1).

Note 2: Unframed all ones output signal, 3 kHz bandwidth, cable length 225 feet to 450 feet.

Note 3: Measured with jitter-free clock applied to TCLK and a bandpass jitter filter with 10Hz and 800kHz cutoff frequencies. Not tested during production test.

Table 17-G. Transmitter Output Characteristics—E3 Mode

(V_{DD} = 3.3V ±5%, T_A = -40°C to +85°C.)

PARAMETER	MIN	TYP	MAX	UNITS
Output Pulse Amplitude (Note 1)	900	1000	1100	mVpk
Pulse Width		14.55		ns
Ratio of Positive and Negative Pulse Amplitudes (at Centers of Pulses)	0.95		1.05	
Ratio of Positive and Negative Pulse Widths (at Nominal Half Amplitude)	0.95		1.05	
Intrinsic Jitter Generation (Note 2)		0.02	0.05	UI_{P-P}
Transmit Driver Monitor Minimum Threshold (V_{TXMIN})		750		mVpk
Transmit Driver Monitor Maximum Threshold (V_{TXMAX})		1250		mVpk

Note 1: Measured on the line side (i.e., the BNC connector side) of the 2:1 transmit transformer (Figure 2-1).

Note 2: Measured with jitter-free clock applied to TCLK and a bandpass jitter filter with 10Hz and 800kHz cutoff frequencies. Not tested during production test.

Downloaded from Datasheet.su

Table 17-H. Parallel CPU Interface Timing

(V_{DD} = 3.3V ±5%, T_A = -40°C to +85°C.) (Figure 17-3 and Figure 17-4)

PARAMETER	SYMBOL	MIN	TYP	MAX	UNITS
Setup Time for A[5:0] Valid to $\overline{CS}$ Active (Notes 1, 2)	t1	0			ns
Setup Time for $\overline{CS}$ Active to $\overline{RD}$, $\overline{WR}$, or $\overline{DS}$ Active	t2	0			ns
Delay Time from $\overline{RD}$ or $\overline{DS}$ Active to D[7:0] Valid	t3			65	ns
Hold Time from $\overline{RD}$ or $\overline{WR}$ or $\overline{DS}$ Inactive to $\overline{CS}$ Inactive	t4	0			ns
Delay from $\overline{CS}$ or $\overline{RD}$ or $\overline{DS}$ Inactive to D[7:0] Invalid or Tri-State (Note 3)	t5	2		20	ns
Wait Time from $\overline{WR}$ or $\overline{DS}$ Active to Latch D[7:0]	t6	65			ns
D[7:0] Setup Time to $\overline{WR}$ or $\overline{DS}$ Inactive	t7	10			ns
D[7:0] Hold Time from $\overline{WR}$ or $\overline{DS}$ Inactive	t8	2			ns
A[5:0] Hold Time from $\overline{WR}$ or $\overline{RD}$ or $\overline{DS}$ Inactive	t9	5			ns
$\overline{RD}$, $\overline{WR}$, or $\overline{DS}$ Inactive Time	t10	75			ns
Muxed Address Valid to ALE Falling (Note 4)	t11	10			ns
Muxed Address Hold Time (Note 4)	t12	10			ns
ALE Pulse Width (Note 4)	t13	30			ns
Setup Time for ALE High or Muxed Address Valid to $\overline{CS}$ Active (Note 4)	t14	0			ns

Note 1: D[7:0] loaded with 50pF when tested as outputs.

Note 2: If a gapped clock is applied on TCLK and local loopback is enabled, read cycle time must be extended by the length of the largest TCLK gap.

Note 3: Not tested during production test.

Note 4: In nonmultiplexed bus applications (Figure 17-3), ALE should be wired high. In multiplexed bus applications (Figure 17-4), A[5:0] should be wired to D[5:0] and the falling edge of ALE latches the address.

Downloaded from Datasheet.su

Figure 17-3. Parallel CPU Interface Timing Diagram (Nonmultiplexed)

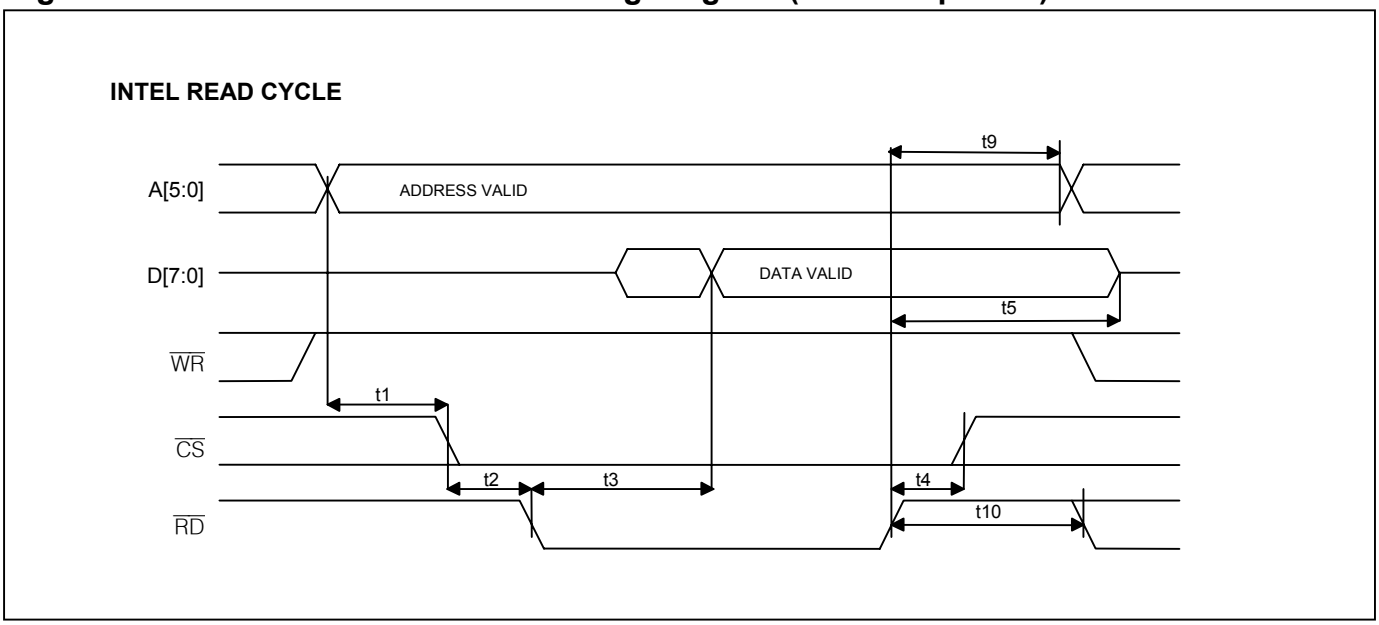

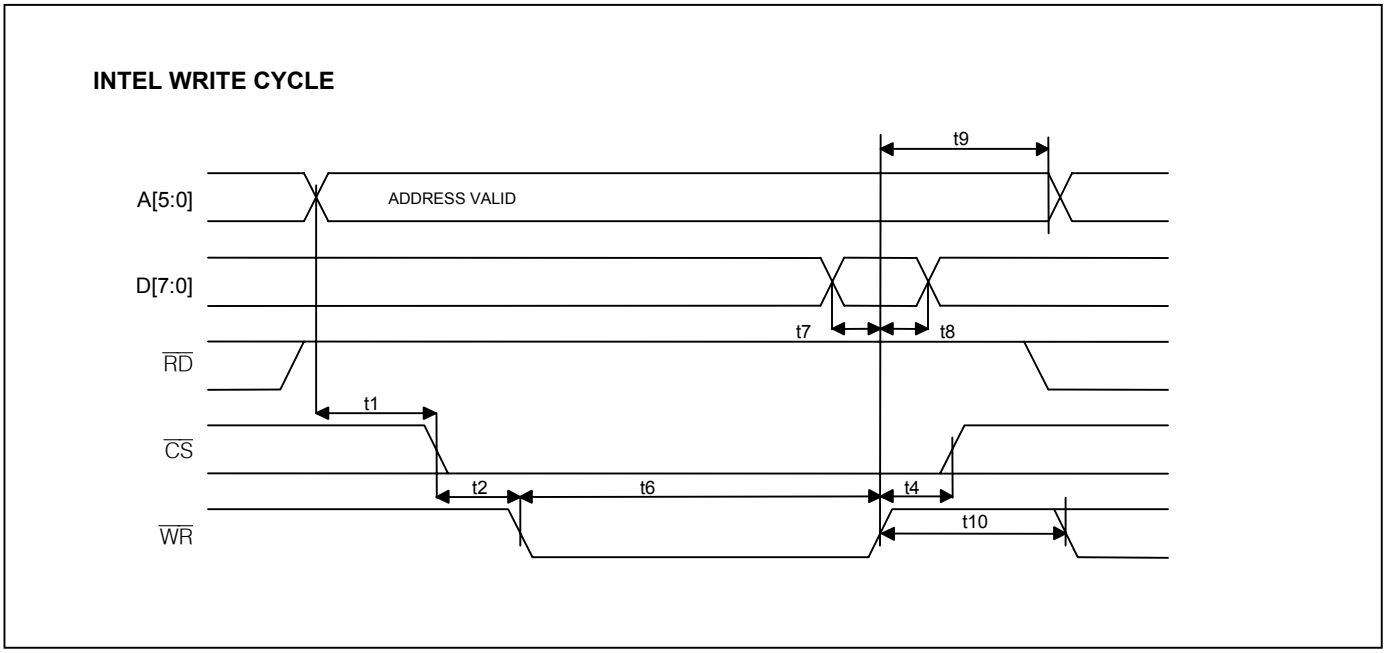

Downloaded from Datasheet.su

Figure 17-3. Parallel CPU Interface Timing Diagram (Nonmultiplexed)(continued)

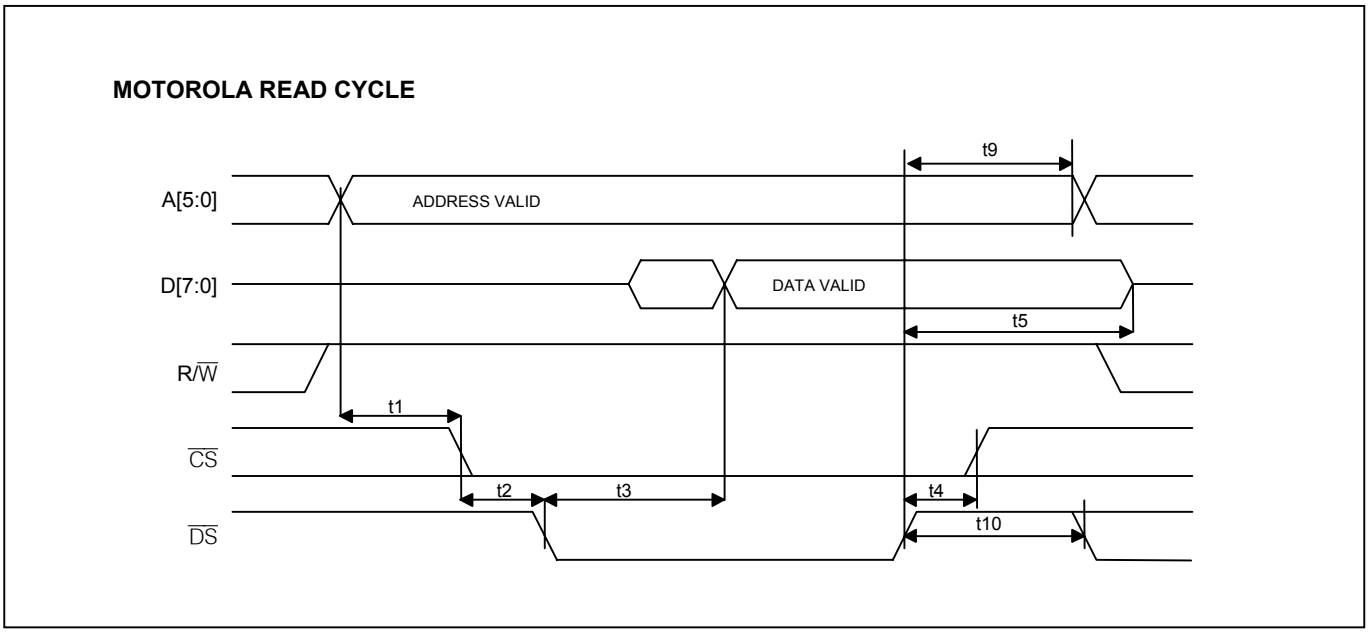

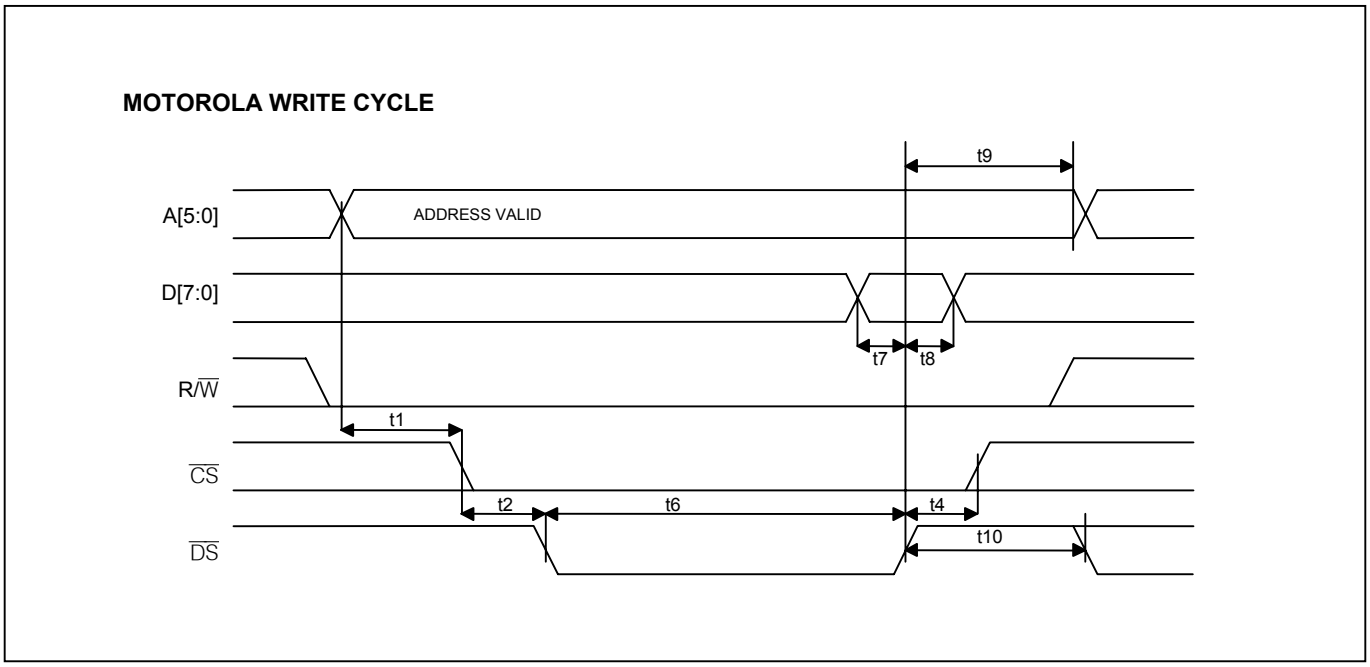

Downloaded from Datasheet.su

Figure 17-4. Parallel CPU Interface Timing Diagram (Multiplexed)

INTEL READ CYCLE

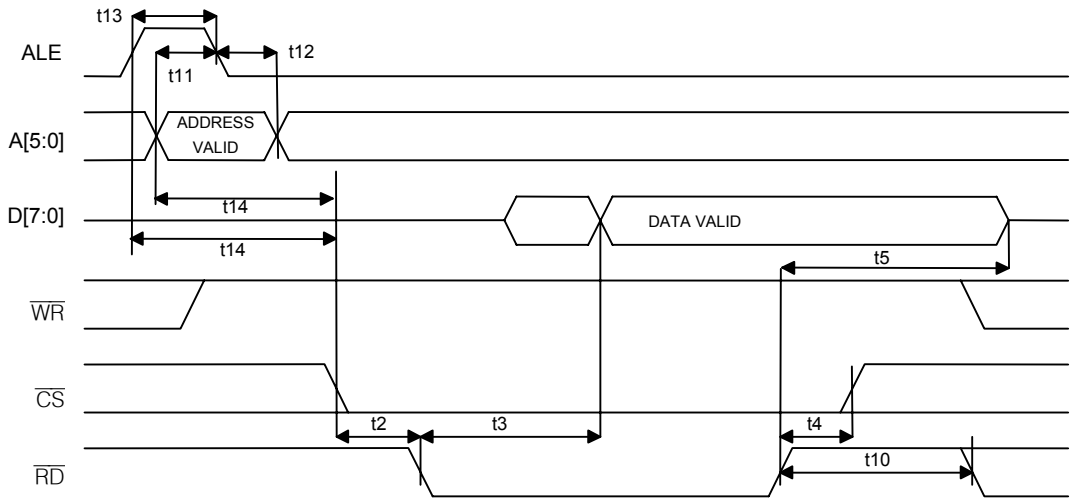

NOTE: t14 STARTS ON THE OCCURRENCE OF EITHER THE RISING EDGE OF ALE OR A VALID ADDRESS, WHICHEVER OCCURS LAST.
NOTE: TO AVOID BUS CONTENTION, STOP DRIVING A[5:0] BEFORE $\overline{RD}$ GOES LOW.

INTEL WRITE CYCLE

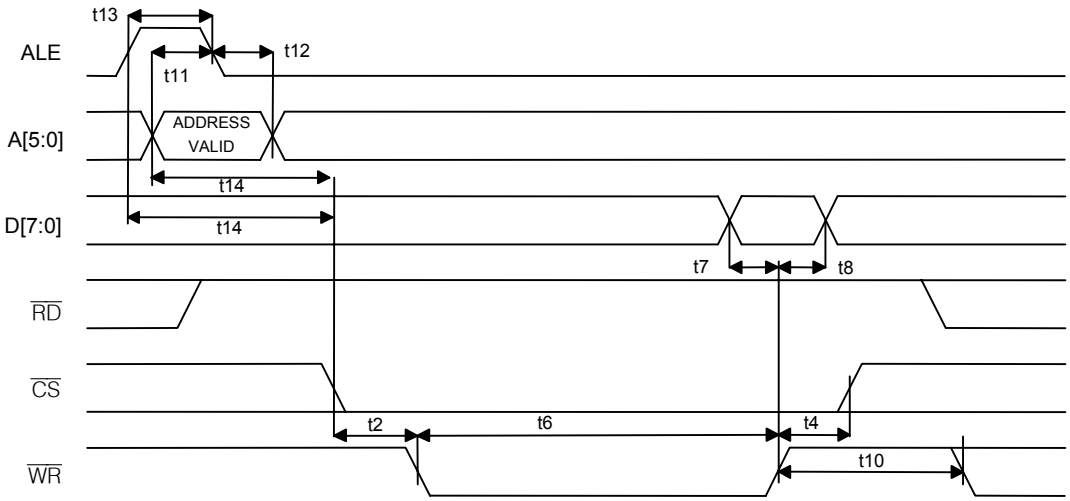

NOTE: t14 STARTS ON THE OCCURRENCE OF EITHER THE RISING EDGE OF ALE OR A VALID ADDRESS, WHICHEVER OCCURS LAST.

Downloaded from Datasheet.su

Figure 17-4. Parallel CPU Interface Timing Diagram (Multiplexed) (continued)

MOTOROLA READ CYCLE

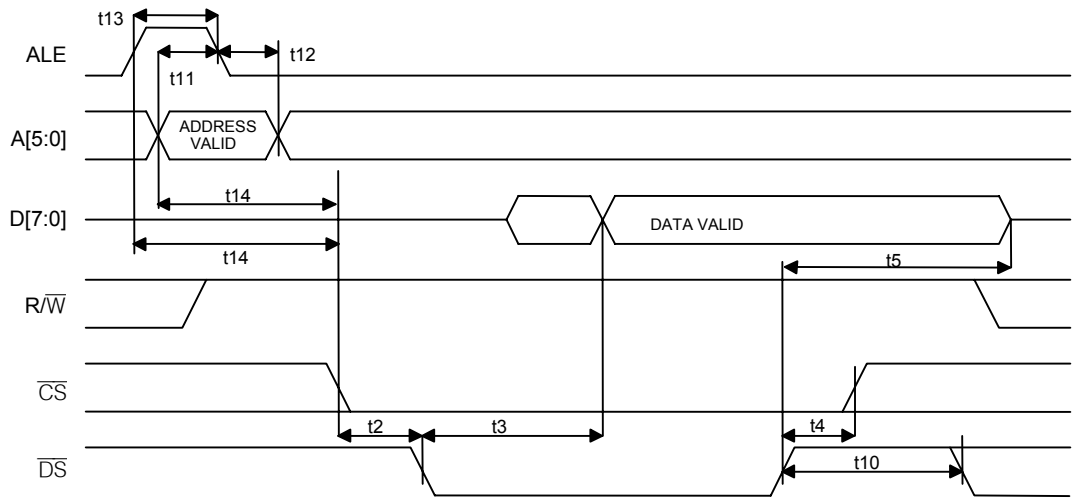

NOTE: t14 STARTS ON THE OCCURRENCE OF EITHER THE RISING EDGE OF ALE OR A VALID ADDRESS, WHICHEVER OCCURS LAST.
NOTE: TO AVOID BUS CONTENTION, STOP DRIVING A[5:0] BEFORE $\overline{RD}$ GOES LOW.

MOTOROLA WRITE CYCLE

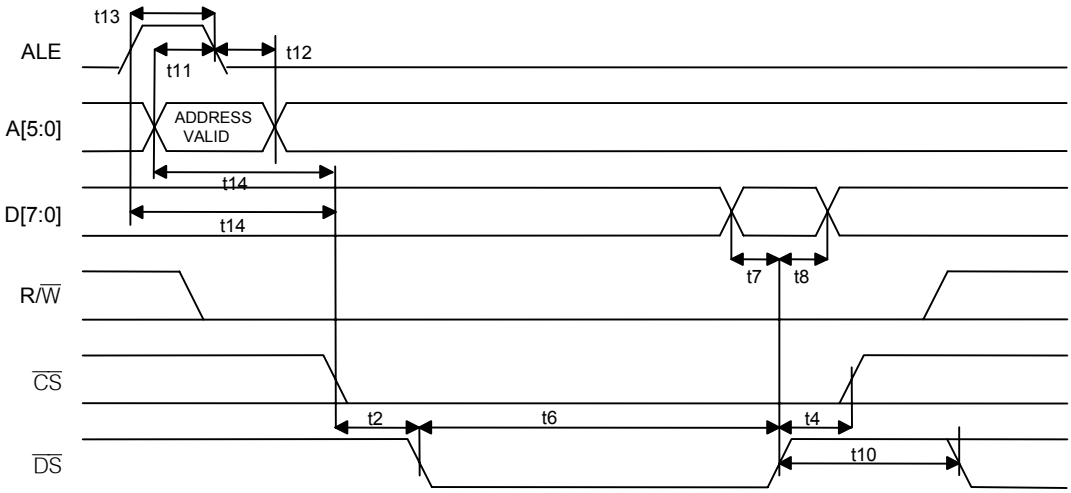

NOTE: t14 STARTS ON THE OCCURRENCE OF EITHER THE RISING EDGE OF ALE OR A VALID ADDRESS, WHICHEVER OCCURS LAST.

Downloaded from Datasheet.su

Table 17-I. SPI Interface Timing

(V_{DD} = 3.3V ±5%, T_A = -40°C to +85°C.) (Figure 17-5)

PARAMETER (Note 1)	SYMBOL	MIN	TYP	MAX	UNITS
SCLK Frequency	f_{BUS}			10	MHz
SCLK Cycle Time	t_{CYC}	100			ns
$\overline{CS}$ Setup to First SCLK Edge	t_{SUC}	15			ns
$\overline{CS}$ Hold time After Last SCLK Edge	t_{HDC}	15			ns
SCLK High Time	t_{CLKH}	50			ns
SCLK Low Time	t_{CLKL}	50			ns
SDI Data Setup Time	t_{SUI}	5			ns
SDI Data Hold Time	t_{HDI}	15			ns
SDO Enable Time (High-Impedance to Output Active)	t_{EN}	0			ns
SDO Disable Time (Output Active to High-Impedance)	t_{DIS}			25	ns
SDO Data Valid Time	t_{DV}			40	ns
SDO Data Hold Time After Update SCLK Edge	t_{HDO}	5			ns

Note 1: All timing is specified with 100pF load on all SPI pins.

Figure 17-5. SPI Interface Timing Diagram

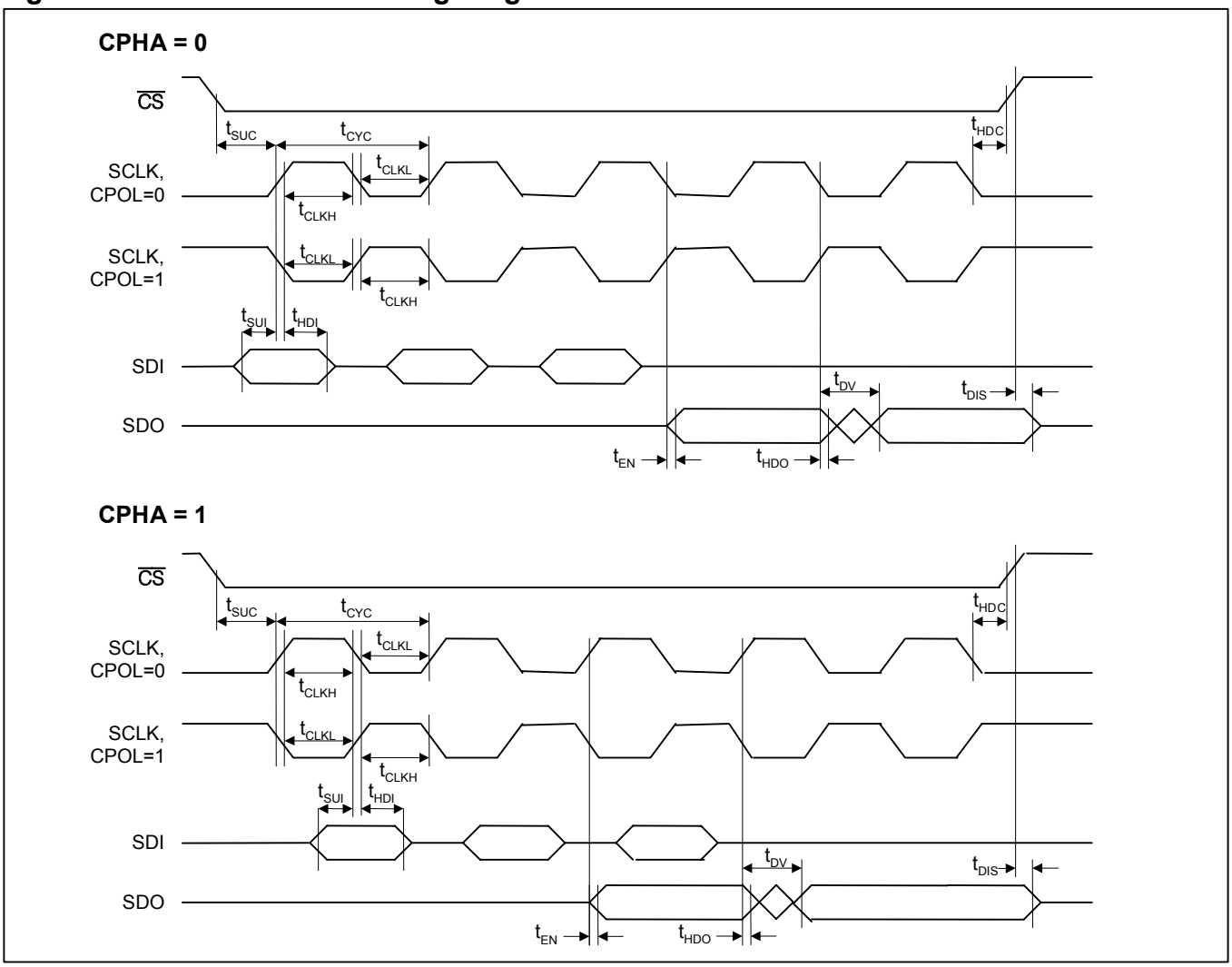

Downloaded from Datasheet.su

Table 17-J. JTAG Interface Timing

(V_{DD} = 3.3V ±5%, T_A = -40°C to +85°C.) (Figure 17-6)

PARAMETER	SYMBOL	MIN	TYP	MAX	UNITS
JTCLK Clock Period	t1		1000		ns
JTCLK Clock High/Low Time (Note 1)	t2/t3	50	500		ns
JTCLK to JTDI, JTMS Setup Time	t4	50			ns
JTCLK to JTDI, JTMS Hold Time	t5	50			ns
JTCLK to JTDO Delay	t6	2		50	ns
JTCLK to JTDO High-Z Delay (Note 2)	t7	2		50	ns
$\overline{\text{JTRST}}$ Width Low Time	t8	100			ns

Note 1: Clock can be stopped high or low.
Note 2: Not tested during production test.

Figure 17-6. JTAG Timing Diagram

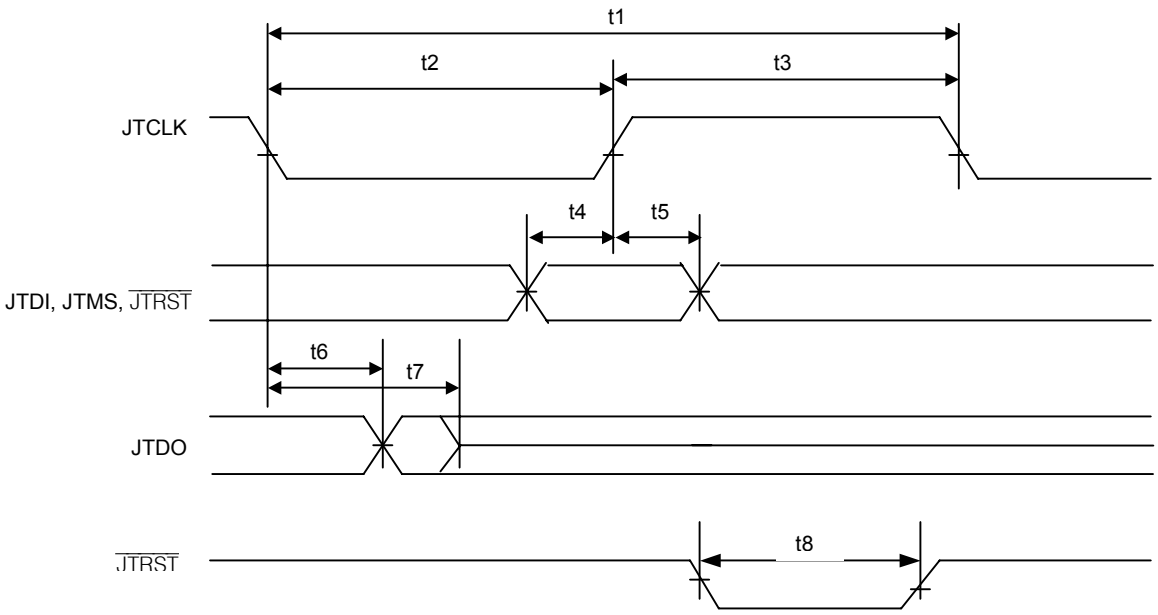

Downloaded from Datasheet.su

18. PIN ASSIGNMENTS

Table 18-A lists pin assignments sorted by signal name. DS3254 has all four LIUs. DS3253 has only LIUs 1, 2, and 3. DS3252 has only LIUs 1 and 2. DS3251 has only LIU 1. Figure 18-1 through Figure 18-11 show pinouts for the four devices in both hardware and CPU bus modes.

Table 18-A. Pin Assignments Sorted by Signal Name

NAME	HARDWARE MODE	PARALLEL BUS MODE	SPI BUS MODE	PIN			
				LIU 1	LIU 2	LIU 3	LIU 4
A0	N	Y	N	K6			
A1	N	Y	N	L6			
A2	N	Y	N	K7			
A3	N	Y	N	L7			
A4	N	Y	N	K8			
A5	N	Y	N	L8			
ALE	N	Y	N	C7			
CPHA	N	N	Y	H3			
CPOL	N	N	Y	J3			
$\overline{CS}$	N	Y	Y	B7			
D0	N	Y	N	E3			
D1	N	Y	N	F2			
D2	N	Y	N	F3			
D3	N	Y	N	G2			
D4	N	Y	N	G3			
D5	N	Y	N	H2			
D6	N	Y	N	H3			
D7	N	Y	N	J3			
E3MCLK	Y	Y	Y	E12			
E3Mn	Y	N	N	F3	G10	C7	K6
$\overline{HIZ}$	Y	Y	Y	J8			
HW	Y	Y	Y	E9			
$\overline{INT}$	N	Y	Y	C5			
JTCLK	Y	Y	Y	E4			
JTDI	Y	Y	Y	H4			
JTDO	Y	Y	Y	J4			
JTMS	Y	Y	Y	D5			
$\overline{JTRST}$	Y	Y	Y	D4			
LLBn	Y	N	N	B5	L8	E11	H2
MOT	N	Y	Y	C6			
PRBSn	Y	Y	Y	B1	L12	A11	M2
RBIN	Y	N	N	D9			
RCINV	Y	N	N	J9			
RCLKn	Y	Y	Y	C1	K12	A10	M3
$\overline{RD}$ / $\overline{DS}$	N	Y	Y	B6			
RJAn	Y	N	N	B4	L9	D11	J2
RLBn	Y	N	N	C5	K8	E10	H3
$\overline{RLOSn}$	Y	Y	Y	A1	M12	A12	M1

Downloaded from Datasheet.su

NAME	HARDWARE MODE	PARALLEL BUS MODE	SPI BUS MODE	PIN			
				LIU 1	LIU 2	LIU 3	LIU 4
RNEGn / RLCVn	Y	Y	Y	C3	K10	C10	K3
RPOSn / RDATn	Y	Y	Y	C2	K11	B10	L3
$\overline{RST}$	Y	Y	Y	H1			
$\overline{RTSn}$	Y	Y	Y	B2	L11	B11	L2
RXNn	Y	Y	Y	A2	M11	B12	L1
RXPn	Y	Y	Y	A3	M10	C12	K1
SCLK	N	N	Y	F3			
SDI	N	N	Y	F2			
SDO	N	N	Y	E3			
STMCLK	Y	Y	Y	M8			
STSn	Y	N	N	F2	G11	B7	L6
T3MCLK	Y	Y	Y	A5			
TBIN	Y	N	N	D8			
TCINV	Y	N	N	H9			
TCLKn	Y	Y	Y	E1	H12	A8	M5
$\overline{TDMn}$	Y	Y	Y	D3	J10	C9	K4
TDSAn	Y	N	N	G2	F11	B6	L7
TDSBn	Y	N	N	G3	F10	C6	K7
$\overline{TEST}$	Y	Y	Y	J5			
TJAn	Y	N	N	C4	K9	D10	J3
TLBOn	Y	N	N	E3	H10	C8	K5
TNEGn	Y	Y	Y	D2	J11	B9	L4
TPOSn / TDATn	Y	Y	Y	D1	J12	A9	M4
$\overline{TTSn}$	Y	Y	Y	E2	H11	B8	L5
TXNn	Y	Y	Y	G1	F12	A6	M7
TXPn	Y	Y	Y	F1	G12	A7	M6
V_{DD}	Y	Y	Y	D6, E5, E6, F4, F5, F6, G7, G8, G9, H7, H8, J7			
V_{SS}	Y	Y	Y	D7, E7, E8, F7, F8, F9, G4, G5, G6, H5, H6, J6			
$\overline{WR}$ / R/$\overline{W}$	N	Y	Y	B5			

Downloaded from Datasheet.su

Figure 18-1. DS3251 Hardware Mode Pin Assignment

A1 $\overline{\text{RLOS1}}$	A2 RXN1	A3 RXP1	A4 RMON1	A5 T3MCLK	A6 N.C.	A7 N.C.	A8 N.C.	A9 N.C.	A10 N.C.	A11 N.C.	A12 N.C.
B1 PRBS1	B2 $\overline{\text{RTS1}}$	B3 N.C.	B4 RJA1	B5 LLB1	B6 N.C.	B7 N.C.	B8 N.C.	B9 N.C.	B10 N.C.	B11 N.C.	B12 N.C.
C1 RCLK1	C2 RPOS1	C3 RNEG1	C4 TJA1	C5 RLB1	C6 N.C.	C7 N.C.	C8 N.C.	C9 N.C.	C10 N.C.	C11 N.C.	C12 N.C.
D1 TPOS1	D2 TNEG1	D3 $\overline{\text{TDM1}}$	D4 $\overline{\text{JTRST}}$	D5 JTMS	D6 V_{DD}	D7 V_{SS}	D8 TBIN	D9 RBIN	D10 N.C.	D11 N.C.	D12 N.C.
E1 TCLK1	E2 $\overline{\text{TTS1}}$	E3 TLBO1	E4 JTCLK	E5 V_{DD}	E6 V_{DD}	E7 V_{SS}	E8 V_{SS}	E9 HW	E10 N.C.	E11 N.C.	E12 E3MCLK
F1 TXP1	F2 STS1	F3 E3M1	F4 V_{DD}	F5 V_{DD}	F6 V_{DD}	F7 V_{SS}	F8 V_{SS}	F9 V_{SS}	F10 N.C.	F11 N.C.	F12 N.C.
G1 TXN1	G2 TDSA1	G3 TDSB1	G4 V_{SS}	G5 V_{SS}	G6 V_{SS}	G7 V_{DD}	G8 V_{DD}	G9 V_{DD}	G10 N.C.	G11 N.C.	G12 N.C.
H1 $\overline{\text{RST}}$	H2 N.C.	H3 N.C.	H4 JTDI	H5 V_{SS}	H6 V_{SS}	H7 V_{DD}	H8 V_{DD}	H9 TCINV	H10 N.C.	H11 N.C.	H12 N.C.
J1 N.C.	J2 N.C.	J3 N.C.	J4 JTDO	J5 $\overline{\text{TEST}}$	J6 V_{SS}	J7 V_{DD}	J8 $\overline{\text{HIZ}}$	J9 RCINV	J10 N.C.	J11 N.C.	J12 N.C.
K1 N.C.	K2 N.C.	K3 N.C.	K4 N.C.	K5 N.C.	K6 N.C.	K7 N.C.	K8 N.C.	K9 N.C.	K10 N.C.	K11 N.C.	K12 N.C.
L1 N.C.	L2 N.C.	L3 N.C.	L4 N.C.	L5 N.C.	L6 N.C.	L7 N.C.	L8 N.C.	L9 N.C.	L10 N.C.	L11 N.C.	L12 N.C.
M1 N.C.	M2 N.C.	M3 N.C.	M4 N.C.	M5 N.C.	M6 N.C.	M7 N.C.	M8 STMCLK	M9 N.C.	M10 N.C.	M11 N.C.	M12 N.C.

- High-Speed Analog
- High-Speed Digital
- Low-Speed Digital
- V_{DD}
- V_{SS}

Downloaded from Datasheet.su

Figure 18-2. DS3251 Parallel Bus Mode Pin Assignment

A1 $\overline{\text{RLOS1}}$	A2 RXN1	A3 RXP1	A4 N.C.	A5 T3MCLK	A6 N.C.	A7 N.C.	A8 N.C.	A9 N.C.	A10 N.C.	A11 N.C.	A12 N.C.
B1 PRBS1	B2 $\overline{\text{RTS1}}$	B3 N.C.	B4 N.C.	B5 $\overline{\text{WR}}$	B6 $\overline{\text{RD}}$	B7 $\overline{\text{CS}}$	B8 N.C.	B9 N.C.	B10 N.C.	B11 N.C.	B12 N.C.
C1 RCLK1	C2 RPOS1	C3 RNEG1	C4 N.C.	C5 $\overline{\text{INT}}$	C6 MOT	C7 ALE	C8 N.C.	C9 N.C.	C10 N.C.	C11 N.C.	C12 N.C.
D1 TPOS1	D2 TNEG1	D3 $\overline{\text{TDM1}}$	D4 $\overline{\text{JTRST}}$	D5 JTMS	D6 V_{DD}	D7 V_{SS}	D8 N.C.	D9 N.C.	D10 N.C.	D11 N.C.	D12 N.C.
E1 TCLK1	E2 $\overline{\text{TTS1}}$	E3 D0	E4 JTCLK	E5 V_{DD}	E6 V_{DD}	E7 V_{SS}	E8 V_{SS}	E9 HW	E10 N.C.	E11 N.C.	E12 E3MCLK
F1 TXP1	F2 D1	F3 D2	F4 V_{DD}	F5 V_{DD}	F6 V_{DD}	F7 V_{SS}	F8 V_{SS}	F9 V_{SS}	F10 N.C.	F11 N.C.	F12 N.C.
G1 TXN1	G2 D3	G3 D4	G4 V_{SS}	G5 V_{SS}	G6 V_{SS}	G7 V_{DD}	G8 V_{DD}	G9 V_{DD}	G10 N.C.	G11 N.C.	G12 N.C.
H1 $\overline{\text{RST}}$	H2 D5	H3 D6	H4 JTDI	H5 V_{SS}	H6 V_{SS}	H7 V_{DD}	H8 V_{DD}	H9 N.C.	H10 N.C.	H11 N.C.	H12 N.C.
J1 N.C.	J2 N.C.	J3 D7	J4 JTDO	J5 $\overline{\text{TEST}}$	J6 V_{SS}	J7 V_{DD}	J8 $\overline{\text{HIZ}}$	J9 N.C.	J10 N.C.	J11 N.C.	J12 N.C.
K1 N.C.	K2 N.C.	K3 N.C.	K4 N.C.	K5 N.C.	K6 A0	K7 A2	K8 N.C.	K9 N.C.	K10 N.C.	K11 N.C.	K12 N.C.
L1 N.C.	L2 N.C.	L3 N.C.	L4 N.C.	L5 N.C.	L6 A1	L7 A3	L8 N.C.	L9 N.C.	L10 N.C.	L11 N.C.	L12 N.C.
M1 N.C.	M2 N.C.	M3 N.C.	M4 N.C.	M5 N.C.	M6 N.C.	M7 N.C.	M8 STMCLK	M9 N.C.	M10 N.C.	M11 N.C.	M12 N.C.

- High-Speed Analog
- High-Speed Digital
- Low-Speed Digital
- V_{DD}
- V_{SS}

Downloaded from Datasheet.su

Figure 18-3. DS3251 SPI Bus Mode Pin Assignment

A1 $\overline{\text{RLOS1}}$	A2 RXN1	A3 RXP1	A4 N.C.	A5 T3MCLK	A6 N.C.	A7 N.C.	A8 N.C.	A9 N.C.	A10 N.C.	A11 N.C.	A12 N.C.
B1 PRBS1	B2 $\overline{\text{RTS1}}$	B3 N.C.	B4 N.C.	B5 $\overline{\text{WR}}$	B6 $\overline{\text{RD}}$	B7 $\overline{\text{CS}}$	B8 N.C.	B9 N.C.	B10 N.C.	B11 N.C.	B12 N.C.
C1 RCLK1	C2 RPOS1	C3 RNEG1	C4 N.C.	C5 $\overline{\text{INT}}$	C6 MOT	C7 N.C.	C8 N.C.	C9 N.C.	C10 N.C.	C11 N.C.	C12 N.C.
D1 TPOS1	D2 TNEG1	D3 $\overline{\text{TDM1}}$	D4 $\overline{\text{JTRST}}$	D5 JTMS	D6 V_{DD}	D7 V_{SS}	D8 N.C.	D9 N.C.	D10 N.C.	D11 N.C.	D12 N.C.
E1 TCLK1	E2 $\overline{\text{TTS1}}$	E3 SDO	E4 JTCLK	E5 V_{DD}	E6 V_{DD}	E7 V_{SS}	E8 V_{SS}	E9 HW	E10 N.C.	E11 N.C.	E12 E3MCLK
F1 TXP1	F2 SDI	F3 SCLK	F4 V_{DD}	F5 V_{DD}	F6 V_{DD}	F7 V_{SS}	F8 V_{SS}	F9 V_{SS}	F10 N.C.	F11 N.C.	F12 N.C.
G1 TXN1	G2 N.C.	G3 N.C.	G4 V_{SS}	G5 V_{SS}	G6 V_{SS}	G7 V_{DD}	G8 V_{DD}	G9 V_{DD}	G10 N.C.	G11 N.C.	G12 N.C.
H1 $\overline{\text{RST}}$	H2 N.C.	H3 CPHA	H4 JTDI	H5 V_{SS}	H6 V_{SS}	H7 V_{DD}	H8 V_{DD}	H9 N.C.	H10 N.C.	H11 N.C.	H12 N.C.
J1 N.C.	J2 N.C.	J3 CPOL	J4 JTDO	J5 $\overline{\text{TEST}}$	J6 V_{SS}	J7 V_{DD}	J8 $\overline{\text{HIZ}}$	J9 N.C.	J10 N.C.	J11 N.C.	J12 N.C.
K1 N.C.	K2 N.C.	K3 N.C.	K4 N.C.	K5 N.C.	K6 N.C.	K7 N.C.	K8 N.C.	K9 N.C.	K10 N.C.	K11 N.C.	K12 N.C.
L1 N.C.	L2 N.C.	L3 N.C.	L4 N.C.	L5 N.C.	L6 N.C.	L7 N.C.	L8 N.C.	L9 N.C.	L10 N.C.	L11 N.C.	L12 N.C.
M1 N.C.	M2 N.C.	M3 N.C.	M4 N.C.	M5 N.C.	M6 N.C.	M7 N.C.	M8 STMCLK	M9 N.C.	M10 N.C.	M11 N.C.	M12 N.C.

- High-Speed Analog
- High-Speed Digital
- Low-Speed Digital
- V_{DD}
- V_{SS}

Downloaded from Datasheet.su

Figure 18-4. DS3252 Hardware Mode Pin Assignment

A1 $\overline{\text{RLOS1}}$	A2 RXN1	A3 RXP1	A4 RMON1	A5 T3MCLK	A6 N.C.	A7 N.C.	A8 N.C.	A9 N.C.	A10 N.C.	A11 N.C.	A12 N.C.
B1 PRBS1	B2 $\overline{\text{RTS1}}$	B3 N.C.	B4 RJA1	B5 LLB1	B6 N.C.	B7 N.C.	B8 N.C.	B9 N.C.	B10 N.C.	B11 N.C.	B12 N.C.
C1 RCLK1	C2 RPOS1	C3 RNEG1	C4 TJA1	C5 RLB1	C6 N.C.	C7 N.C.	C8 N.C.	C9 N.C.	C10 N.C.	C11 N.C.	C12 N.C.
D1 TPOS1	D2 TNEG1	D3 $\overline{\text{TDM1}}$	D4 $\overline{\text{JTRST}}$	D5 JTMS	D6 V_{DD}	D7 V_{SS}	D8 TBIN	D9 RBIN	D10 N.C.	D11 N.C.	D12 N.C.
E1 TCLK1	E2 $\overline{\text{TTS1}}$	E3 TLBO1	E4 JTCLK	E5 V_{DD}	E6 V_{DD}	E7 V_{SS}	E8 V_{SS}	E9 HW	E10 N.C.	E11 N.C.	E12 E3MCLK
F1 TXP1	F2 STS1	F3 E3M1	F4 V_{DD}	F5 V_{DD}	F6 V_{DD}	F7 V_{SS}	F8 V_{SS}	F9 V_{SS}	F10 TDSB2	F11 TDSA2	F12 TXN2
G1 TXN1	G2 TDSA1	G3 TDSB1	G4 V_{SS}	G5 V_{SS}	G6 V_{SS}	G7 V_{DD}	G8 V_{DD}	G9 V_{DD}	G10 E3M2	G11 STS2	G12 TXP2
H1 $\overline{\text{RST}}$	H2 N.C.	H3 N.C.	H4 JTDI	H5 V_{SS}	H6 V_{SS}	H7 V_{DD}	H8 V_{DD}	H9 TCINV	H10 TLBO2	H11 $\overline{\text{TTS2}}$	H12 TCLK2
J1 N.C.	J2 N.C.	J3 N.C.	J4 JTDO	J5 $\overline{\text{TEST}}$	J6 V_{SS}	J7 V_{DD}	J8 $\overline{\text{HIZ}}$	J9 RCINV	J10 $\overline{\text{TDM2}}$	J11 TNEG2	J12 TPOS2
K1 N.C.	K2 N.C.	K3 N.C.	K4 N.C.	K5 N.C.	K6 N.C.	K7 N.C.	K8 RLB2	K9 TJA2	K10 RNEG2	K11 RPOS2	K12 RCLK2
L1 N.C.	L2 N.C.	L3 N.C.	L4 N.C.	L5 N.C.	L6 N.C.	L7 N.C.	L8 LLB2	L9 RJA2	L10 N.C.	L11 $\overline{\text{RTS2}}$	L12 PRBS2
M1 N.C.	M2 N.C.	M3 N.C.	M4 N.C.	M5 N.C.	M6 N.C.	M7 N.C.	M8 STMCLK	M9 RMON2	M10 RXP2	M11 RXN2	M12 RLOS2

- High-Speed Analog
- High-Speed Digital
- Low-Speed Digital
- V_{DD}
- V_{SS}

Downloaded from Datasheet.su

Figure 18-5. DS3252 Parallel Bus Mode Pin Assignment

A1 $\overline{\text{RLOS1}}$	A2 RXN1	A3 RXP1	A4 N.C.	A5 T3MCLK	A6 N.C.	A7 N.C.	A8 N.C.	A9 N.C.	A10 N.C.	A11 N.C.	A12 N.C.
B1 PRBS1	B2 $\overline{\text{RTS1}}$	B3 N.C.	B4 N.C.	B5 $\overline{\text{WR}}$	B6 $\overline{\text{RD}}$	B7 $\overline{\text{CS}}$	B8 N.C.	B9 N.C.	B10 N.C.	B11 N.C.	B12 N.C.
C1 RCLK1	C2 RPOS1	C3 RNEG1	C4 N.C.	C5 $\overline{\text{INT}}$	C6 MOT	C7 ALE	C8 N.C.	C9 N.C.	C10 N.C.	C11 N.C.	C12 N.C.
D1 TPOS1	D2 TNEG1	D3 $\overline{\text{TDM1}}$	D4 $\overline{\text{JTRST}}$	D5 JTMS	D6 V_{DD}	D7 V_{SS}	D8 N.C.	D9 N.C.	D10 N.C.	D11 N.C.	D12 N.C.
E1 TCLK1	E2 $\overline{\text{TTS1}}$	E3 D0	E4 JTCLK	E5 V_{DD}	E6 V_{DD}	E7 V_{SS}	E8 V_{SS}	E9 HW	E10 N.C.	E11 N.C.	E12 E3MCLK
F1 TXP1	F2 D1	F3 D2	F4 V_{DD}	F5 V_{DD}	F6 V_{DD}	F7 V_{SS}	F8 V_{SS}	F9 V_{SS}	F10 N.C.	F11 N.C.	F12 TXN2
G1 TXN1	G2 D3	G3 D4	G4 V_{SS}	G5 V_{SS}	G6 V_{SS}	G7 V_{DD}	G8 V_{DD}	G9 V_{DD}	G10 N.C.	G11 N.C.	G12 TXP2
H1 $\overline{\text{RST}}$	H2 D5	H3 D6	H4 JTDI	H5 V_{SS}	H6 V_{SS}	H7 V_{DD}	H8 V_{DD}	H9 N.C.	H10 N.C.	H11 $\overline{\text{TTS2}}$	H12 TCLK2
J1 N.C.	J2 N.C.	J3 D7	J4 JTDO	J5 $\overline{\text{TEST}}$	J6 V_{SS}	J7 V_{DD}	J8 $\overline{\text{HIZ}}$	J9 N.C.	J10 $\overline{\text{TDM2}}$	J11 TNEG2	J12 TPOS2
K1 N.C.	K2 N.C.	K3 N.C.	K4 N.C.	K5 N.C.	K6 A0	K7 A2	K8 A4	K9 N.C.	K10 RNEG2	K11 RPOS2	K12 RCLK2
L1 N.C.	L2 N.C.	L3 N.C.	L4 N.C.	L5 N.C.	L6 A1	L7 A3	L8 N.C.	L9 N.C.	L10 N.C.	L11 $\overline{\text{RTS2}}$	L12 PRBS2
M1 N.C.	M2 N.C.	M3 N.C.	M4 N.C.	M5 N.C.	M6 N.C.	M7 N.C.	M8 STMCLK	M9 N.C.	M10 RXP2	M11 RXN2	M12 $\overline{\text{RLOS2}}$

- High-Speed Analog
- High-Speed Digital
- Low-Speed Digital
- V_{DD}
- V_{SS}

Downloaded from Datasheet.su

Figure 18-6. DS3252 SPI Bus Mode Pin Assignment

A1 $\overline{\text{RLOS1}}$	A2 RXN1	A3 RXP1	A4 N.C.	A5 T3MCLK	A6 N.C.	A7 N.C.	A8 N.C.	A9 N.C.	A10 N.C.	A11 N.C.	A12 N.C.
B1 PRBS1	B2 $\overline{\text{RTS1}}$	B3 N.C.	B4 N.C.	B5 $\overline{\text{WR}}$	B6 $\overline{\text{RD}}$	B7 $\overline{\text{CS}}$	B8 N.C.	B9 N.C.	B10 N.C.	B11 N.C.	B12 N.C.
C1 RCLK1	C2 RPOS1	C3 RNEG1	C4 N.C.	C5 $\overline{\text{INT}}$	C6 MOT	C7 N.C.	C8 N.C.	C9 N.C.	C10 N.C.	C11 N.C.	C12 N.C.
D1 TPOS1	D2 TNEG1	D3 $\overline{\text{TDM1}}$	D4 $\overline{\text{JTRST}}$	D5 JTMS	D6 V_{DD}	D7 V_{SS}	D8 N.C.	D9 N.C.	D10 N.C.	D11 N.C.	D12 N.C.
E1 TCLK1	E2 $\overline{\text{TTS1}}$	E3 SDO	E4 JTCLK	E5 V_{DD}	E6 V_{DD}	E7 V_{SS}	E8 V_{SS}	E9 HW	E10 N.C.	E11 N.C.	E12 E3MCLK
F1 TXP1	F2 SDI	F3 SCLK	F4 V_{DD}	F5 V_{DD}	F6 V_{DD}	F7 V_{SS}	F8 V_{SS}	F9 V_{SS}	F10 N.C.	F11 N.C.	F12 TXN2
G1 TXN1	G2 N.C.	G3 N.C.	G4 V_{SS}	G5 V_{SS}	G6 V_{SS}	G7 V_{DD}	G8 V_{DD}	G9 V_{DD}	G10 N.C.	G11 N.C.	G12 TXP2
H1 $\overline{\text{RST}}$	H2 N.C.	H3 CPHA	H4 JTDI	H5 V_{SS}	H6 V_{SS}	H7 V_{DD}	H8 V_{DD}	H9 N.C.	H10 N.C.	H11 $\overline{\text{TTS2}}$	H12 TCLK2
J1 N.C.	J2 N.C.	J3 CPOL	J4 JTDO	J5 $\overline{\text{TEST}}$	J6 V_{SS}	J7 V_{DD}	J8 $\overline{\text{HIZ}}$	J9 N.C.	J10 $\overline{\text{TDM2}}$	J11 TNEG2	J12 TPOS2
K1 N.C.	K2 N.C.	K3 N.C.	K4 N.C.	K5 N.C.	K6 N.C.	K7 N.C.	K8 N.C.	K9 N.C.	K10 RNEG2	K11 RPOS2	K12 RCLK2
L1 N.C.	L2 N.C.	L3 N.C.	L4 N.C.	L5 N.C.	L6 N.C.	L7 N.C.	L8 N.C.	L9 N.C.	L10 N.C.	L11 $\overline{\text{RTS2}}$	L12 PRBS2
M1 N.C.	M2 N.C.	M3 N.C.	M4 N.C.	M5 N.C.	M6 N.C.	M7 N.C.	M8 STMCLK	M9 N.C.	M10 RXP2	M11 RXN2	M12 $\overline{\text{RLOS2}}$

- High-Speed Analog
- High-Speed Digital
- Low-Speed Digital
- V_{DD}
- V_{SS}

Downloaded from Datasheet.su

Figure 18-7. DS3253 Hardware Mode Pin Assignment

A1 $\overline{\text{RLOS1}}$	A2 RXN1	A3 RXP1	A4 RMON1	A5 T3MCLK	A6 TXN3	A7 TXP3	A8 TCLK3	A9 TPOS3	A10 RCLK3	A11 PRBS3	A12 $\overline{\text{RLOS3}}$
B1 PRBS1	B2 $\overline{\text{RTS1}}$	B3 N.C.	B4 RJA1	B5 LLB1	B6 TDSA3	B7 STS3	B8 $\overline{\text{TTS3}}$	B9 TNEG3	B10 RPOS3	B11 $\overline{\text{RTS3}}$	B12 RXN3
C1 RCLK1	C2 RPOS1	C3 RNEG1	C4 TJA1	C5 RLB1	C6 TDSB3	C7 E3M3	C8 TLBO3	C9 $\overline{\text{TDM3}}$	C10 RNEG3	C11 N.C.	C12 RXP3
D1 TPOS1	D2 TNEG1	D3 $\overline{\text{TDM1}}$	D4 $\overline{\text{JTRST}}$	D5 JTMS	D6 V_{DD}	D7 V_{SS}	D8 TBIN	D9 RBIN	D10 TJA3	D11 RJA3	D12 RMON3
E1 TCLK1	E2 $\overline{\text{TTS1}}$	E3 TLBO1	E4 JTCLK	E5 V_{DD}	E6 V_{DD}	E7 V_{SS}	E8 V_{SS}	E9 HW	E10 RLB3	E11 LLB3	E12 E3MCLK
F1 TXP1	F2 STS1	F3 E3M1	F4 V_{DD}	F5 V_{DD}	F6 V_{DD}	F7 V_{SS}	F8 V_{SS}	F9 V_{SS}	F10 TDSB2	F11 TDSA2	F12 TXN2
G1 TXN1	G2 TDSA1	G3 TDSB1	G4 V_{SS}	G5 V_{SS}	G6 V_{SS}	G7 V_{DD}	G8 V_{DD}	G9 V_{DD}	G10 E3M2	G11 STS2	G12 TXP2
H1 $\overline{\text{RST}}$	H2 N.C.	H3 N.C.	H4 JTDI	H5 V_{SS}	H6 V_{SS}	H7 V_{DD}	H8 V_{DD}	H9 TCINV	H10 TLBO2	H11 $\overline{\text{TTS2}}$	H12 TCLK2
J1 N.C.	J2 N.C.	J3 N.C.	J4 JTDO	J5 $\overline{\text{TEST}}$	J6 V_{SS}	J7 V_{DD}	J8 $\overline{\text{HIZ}}$	J9 RCINV	J10 $\overline{\text{TDM2}}$	J11 TNEG2	J12 TPOS2
K1 N.C.	K2 N.C.	K3 N.C.	K4 N.C.	K5 N.C.	K6 N.C.	K7 N.C.	K8 RLB2	K9 TJA2	K10 RNEG2	K11 RPOS2	K12 RCLK2
L1 N.C.	L2 N.C.	L3 N.C.	L4 N.C.	L5 N.C.	L6 N.C.	L7 N.C.	L8 LLB2	L9 RJA2	L10 N.C.	L11 $\overline{\text{RTS2}}$	L12 PRBS2
M1 N.C.	M2 N.C.	M3 N.C.	M4 N.C.	M5 N.C.	M6 N.C.	M7 N.C.	M8 STMCLK	M9 RMON2	M10 RXP2	M11 RXN2	M12 RLOS2

- High-Speed Analog
- High-Speed Digital
- Low-Speed Digital
- V_{DD}
- V_{SS}

Downloaded from Datasheet.su

Figure 18-8. DS3253 Parallel Bus Mode Pin Assignment

A1 $\overline{\text{RLOS1}}$	A2 RXN1	A3 RXP1	A4 N.C.	A5 T3MCLK	A6 TXN3	A7 TXP3	A8 TCLK3	A9 TPOS3	A10 RCLK3	A11 PRBS3	A12 $\overline{\text{RLOS3}}$
B1 PRBS1	B2 $\overline{\text{RTS1}}$	B3 N.C.	B4 N.C.	B5 $\overline{\text{WR}}$	B6 $\overline{\text{RD}}$	B7 $\overline{\text{CS}}$	B8 $\overline{\text{TTS3}}$	B9 TNEG3	B10 RPOS3	B11 $\overline{\text{RTS3}}$	B12 RXN3
C1 RCLK1	C2 RPOS1	C3 RNEG1	C4 N.C.	C5 $\overline{\text{INT}}$	C6 MOT	C7 ALE	C8 N.C.	C9 $\overline{\text{TDM3}}$	C10 RNEG3	C11 N.C.	C12 RXP3
D1 TPOS1	D2 TNEG1	D3 $\overline{\text{TDM1}}$	D4 $\overline{\text{JTRST}}$	D5 JTMS	D6 V_{DD}	D7 V_{SS}	D8 N.C.	D9 N.C.	D10 N.C.	D11 N.C.	D12 N.C.
E1 TCLK1	E2 $\overline{\text{TTS1}}$	E3 D0	E4 JTCLK	E5 V_{DD}	E6 V_{DD}	E7 V_{SS}	E8 V_{SS}	E9 HW	E10 N.C.	E11 N.C.	E12 E3MCLK
F1 TXP1	F2 D1	F3 D2	F4 V_{DD}	F5 V_{DD}	F6 V_{DD}	F7 V_{SS}	F8 V_{SS}	F9 V_{SS}	F10 N.C.	F11 N.C.	F12 TXN2
G1 TXN1	G2 D3	G3 D4	G4 V_{SS}	G5 V_{SS}	G6 V_{SS}	G7 V_{DD}	G8 V_{DD}	G9 V_{DD}	G10 N.C.	G11 N.C.	G12 TXP2
H1 $\overline{\text{RST}}$	H2 D5	H3 D6	H4 JTDI	H5 V_{SS}	H6 V_{SS}	H7 V_{DD}	H8 V_{DD}	H9 N.C.	H10 N.C.	H11 $\overline{\text{TTS2}}$	H12 TCLK2
J1 N.C.	J2 N.C.	J3 D7	J4 JTDO	J5 $\overline{\text{TEST}}$	J6 V_{SS}	J7 V_{DD}	J8 $\overline{\text{HIZ}}$	J9 N.C.	J10 $\overline{\text{TDM2}}$	J11 TNEG2	J12 TPOS2
K1 N.C.	K2 N.C.	K3 N.C.	K4 N.C.	K5 N.C.	K6 A0	K7 A2	K8 A4	K9 N.C.	K10 RNEG2	K11 RPOS2	K12 RCLK2
L1 N.C.	L2 N.C.	L3 N.C.	L4 N.C.	L5 N.C.	L6 A1	L7 A3	L8 A5	L9 N.C.	L10 N.C.	L11 $\overline{\text{RTS2}}$	L12 PRBS2
M1 N.C.	M2 N.C.	M3 N.C.	M4 N.C.	M5 N.C.	M6 N.C.	M7 N.C.	M8 STMCLK	M9 N.C.	M10 RXP2	M11 RXN2	M12 $\overline{\text{RLOS2}}$

- High-Speed Analog
- High-Speed Digital
- Low-Speed Digital
- V_{DD}
- V_{SS}

Downloaded from Datasheet.su

Figure 18-9. DS3253 SPI Bus Mode Pin Assignment

A1 $\overline{\text{RLOS1}}$	A2 RXN1	A3 RXP1	A4 N.C.	A5 T3MCLK	A6 TXN3	A7 TXP3	A8 TCLK3	A9 TPOS3	A10 RCLK3	A11 PRBS3	A12 $\overline{\text{RLOS3}}$
B1 PRBS1	B2 $\overline{\text{RTS1}}$	B3 N.C.	B4 N.C.	B5 $\overline{\text{WR}}$	B6 $\overline{\text{RD}}$	B7 $\overline{\text{CS}}$	B8 $\overline{\text{TTS3}}$	B9 TNEG3	B10 RPOS3	B11 $\overline{\text{RTS3}}$	B12 RXN3
C1 RCLK1	C2 RPOS1	C3 RNEG1	C4 N.C.	C5 $\overline{\text{INT}}$	C6 MOT	C7 N.C.	C8 N.C.	C9 $\overline{\text{TDM3}}$	C10 RNEG3	C11 N.C.	C12 RXP3
D1 TPOS1	D2 TNEG1	D3 $\overline{\text{TDM1}}$	D4 $\overline{\text{JTRST}}$	D5 JTMS	D6 V_{DD}	D7 V_{SS}	D8 N.C.	D9 N.C.	D10 N.C.	D11 N.C.	D12 N.C.
E1 TCLK1	E2 $\overline{\text{TTS1}}$	E3 SDO	E4 JTCLK	E5 V_{DD}	E6 V_{DD}	E7 V_{SS}	E8 V_{SS}	E9 HW	E10 N.C.	E11 N.C.	E12 E3MCLK
F1 TXP1	F2 SDI	F3 SCLK	F4 V_{DD}	F5 V_{DD}	F6 V_{DD}	F7 V_{SS}	F8 V_{SS}	F9 V_{SS}	F10 N.C.	F11 N.C.	F12 TXN2
G1 TXN1	G2 N.C.	G3 N.C.	G4 V_{SS}	G5 V_{SS}	G6 V_{SS}	G7 V_{DD}	G8 V_{DD}	G9 V_{DD}	G10 N.C.	G11 N.C.	G12 TXP2
H1 $\overline{\text{RST}}$	H2 N.C.	H3 CPHA	H4 JTDI	H5 V_{SS}	H6 V_{SS}	H7 V_{DD}	H8 V_{DD}	H9 N.C.	H10 N.C.	H11 $\overline{\text{TTS2}}$	H12 TCLK2
J1 N.C.	J2 N.C.	J3 CPOL	J4 JTDO	J5 $\overline{\text{TEST}}$	J6 V_{SS}	J7 V_{DD}	J8 $\overline{\text{HIZ}}$	J9 N.C.	J10 $\overline{\text{TDM2}}$	J11 TNEG2	J12 TPOS2
K1 N.C.	K2 N.C.	K3 N.C.	K4 N.C.	K5 N.C.	K6 N.C.	K7 N.C.	K8 N.C.	K9 N.C.	K10 RNEG2	K11 RPOS2	K12 RCLK2
L1 N.C.	L2 N.C.	L3 N.C.	L4 N.C.	L5 N.C.	L6 N.C.	L7 N.C.	L8 N.C.	L9 N.C.	L10 N.C.	L11 $\overline{\text{RTS2}}$	L12 PRBS2
M1 N.C.	M2 N.C.	M3 N.C.	M4 N.C.	M5 N.C.	M6 N.C.	M7 N.C.	M8 STMCLK	M9 N.C.	M10 RXP2	M11 RXN2	M12 $\overline{\text{RLOS2}}$

- High-Speed Analog
- High-Speed Digital
- Low-Speed Digital
- V_{DD}
- V_{SS}

Downloaded from Datasheet.su

Figure 18-10. DS3254 Hardware Mode Pin Assignment

A1 $\overline{\text{RLOS1}}$	A2 RXN1	A3 RXP1	A4 RMON1	A5 T3MCLK	A6 TXN3	A7 TXP3	A8 TCLK3	A9 TPOS3	A10 RCLK3	A11 PRBS3	A12 $\overline{\text{RLOS3}}$
B1 PRBS1	B2 $\overline{\text{RTS1}}$	B3 N.C.	B4 RJA1	B5 LLB1	B6 TDSA3	B7 STS3	B8 $\overline{\text{TTS3}}$	B9 TNEG3	B10 RPOS3	B11 $\overline{\text{RTS3}}$	B12 RXN3
C1 RCLK1	C2 RPOS1	C3 RNEG1	C4 TJA1	C5 RLB1	C6 TDSB3	C7 E3M3	C8 TLBO3	C9 $\overline{\text{TDM3}}$	C10 RNEG3	C11 N.C.	C12 RXP3
D1 TPOS1	D2 TNEG1	D3 $\overline{\text{TDM1}}$	D4 $\overline{\text{JTRST}}$	D5 JTMS	D6 V_{DD}	D7 V_{SS}	D8 TBIN	D9 RBIN	D10 TJA3	D11 RJA3	D12 RMON3
E1 TCLK1	E2 $\overline{\text{TTS1}}$	E3 TLBO1	E4 JTCLK	E5 V_{DD}	E6 V_{DD}	E7 V_{SS}	E8 V_{SS}	E9 HW	E10 RLB3	E11 LLB3	E12 E3MCLK
F1 TXP1	F2 STS1	F3 E3M1	F4 V_{DD}	F5 V_{DD}	F6 V_{DD}	F7 V_{SS}	F8 V_{SS}	F9 V_{SS}	F10 TDSB2	F11 TDSA2	F12 TXN2
G1 TXN1	G2 TDSA1	G3 TDSB1	G4 V_{SS}	G5 V_{SS}	G6 V_{SS}	G7 V_{DD}	G8 V_{DD}	G9 V_{DD}	G10 E3M2	G11 STS2	G12 TXP2
H1 $\overline{\text{RST}}$	H2 LLB4	H3 RLB4	H4 JTDI	H5 V_{SS}	H6 V_{SS}	H7 V_{DD}	H8 V_{DD}	H9 TCINV	H10 TLBO2	H11 $\overline{\text{TTS2}}$	H12 TCLK2
J1 RMON4	J2 RJA4	J3 TJA4	J4 JTDO	J5 $\overline{\text{TEST}}$	J6 V_{SS}	J7 V_{DD}	J8 $\overline{\text{HIZ}}$	J9 RCINV	J10 $\overline{\text{TDM2}}$	J11 TNEG2	J12 TPOS2
K1 RXP4	K2 N.C.	K3 RNEG4	K4 $\overline{\text{TDM4}}$	K5 TLBO4	K6 E3M4	K7 TDSB4	K8 RLB2	K9 TJA2	K10 RNEG2	K11 RPOS2	K12 RCLK2
L1 RXN4	L2 $\overline{\text{RTS4}}$	L3 RPOS4	L4 TNEG4	L5 $\overline{\text{TTS4}}$	L6 STS4	L7 TDSA4	L8 LLB2	L9 RJA2	L10 N.C.	L11 $\overline{\text{RTS2}}$	L12 PRBS2
M1 $\overline{\text{RLOS4}}$	M2 PRBS4	M3 RCLK4	M4 TPOS4	M5 TCLK4	M6 TXP4	M7 TXN4	M8 STMCLK	M9 RMON2	M10 RXP2	M11 RXN2	M12 $\overline{\text{RLOS2}}$

- High-Speed Analog
- High-Speed Digital
- Low-Speed Digital
- V_{DD}
- V_{SS}

Downloaded from Datasheet.su

Figure 18-11. DS3254 Parallel Bus Mode Pin Assignment

A1 $\overline{\text{RLOS1}}$	A2 RXN1	A3 RXP1	A4 N.C.	A5 T3MCLK	A6 TXN3	A7 TXP3	A8 TCLK3	A9 TPOS3	A10 RCLK3	A11 PRBS3	A12 $\overline{\text{RLOS3}}$
B1 PRBS1	B2 $\overline{\text{RTS1}}$	B3 N.C.	B4 N.C.	B5 $\overline{\text{WR}}$	B6 $\overline{\text{RD}}$	B7 $\overline{\text{CS}}$	B8 $\overline{\text{TTS3}}$	B9 TNEG3	B10 RPOS3	B11 $\overline{\text{RTS3}}$	B12 RXN3
C1 RCLK1	C2 RPOS1	C3 RNEG1	C4 N.C.	C5 $\overline{\text{INT}}$	C6 MOT	C7 ALE	C8 N.C.	C9 $\overline{\text{TDM3}}$	C10 RNEG3	C11 N.C.	C12 RXP3
D1 TPOS1	D2 TNEG1	D3 $\overline{\text{TDM1}}$	D4 $\overline{\text{JTRST}}$	D5 JTMS	D6 V_{DD}	D7 V_{SS}	D8 N.C.	D9 N.C.	D10 N.C.	D11 N.C.	D12 N.C.
E1 TCLK1	E2 $\overline{\text{TTS1}}$	E3 D0	E4 JTCLK	E5 V_{DD}	E6 V_{DD}	E7 V_{SS}	E8 V_{SS}	E9 HW	E10 N.C.	E11 N.C.	E12 E3MCLK
F1 TXP1	F2 D1	F3 D2	F4 V_{DD}	F5 V_{DD}	F6 V_{DD}	F7 V_{SS}	F8 V_{SS}	F9 V_{SS}	F10 N.C.	F11 N.C.	F12 TXN2
G1 TXN1	G2 D3	G3 D4	G4 V_{SS}	G5 V_{SS}	G6 V_{SS}	G7 V_{DD}	G8 V_{DD}	G9 V_{DD}	G10 N.C.	G11 N.C.	G12 TXP2
H1 $\overline{\text{RST}}$	H2 D5	H3 D6	H4 JTDI	H5 V_{SS}	H6 V_{SS}	H7 V_{DD}	H8 V_{DD}	H9 N.C.	H10 N.C.	H11 $\overline{\text{TTS2}}$	H12 TCLK2
J1 N.C.	J2 N.C.	J3 D7	J4 JTDO	J5 $\overline{\text{TEST}}$	J6 V_{SS}	J7 V_{DD}	J8 $\overline{\text{HIZ}}$	J9 N.C.	J10 $\overline{\text{TDM2}}$	J11 TNEG2	J12 TPOS2
K1 RXP4	K2 N.C.	K3 RNEG4	K4 $\overline{\text{TDM4}}$	K5 N.C.	K6 A0	K7 A2	K8 A4	K9 N.C.	K10 RNEG2	K11 RPOS2	K12 RCLK2
L1 RXN4	L2 $\overline{\text{RTS4}}$	L3 RPOS4	L4 TNEG4	L5 $\overline{\text{TTS4}}$	L6 A1	L7 A3	L8 A5	L9 N.C.	L10 N.C.	L11 $\overline{\text{RTS2}}$	L12 PRBS2
M1 $\overline{\text{RLOS4}}$	M2 PRBS4	M3 RCLK4	M4 TPOS4	M5 TCLK4	M6 TXP4	M7 TXN4	M8 STMCLK	M9 N.C.	M10 RXP2	M11 RXN2	M12 $\overline{\text{RLOS2}}$

- High-Speed Analog
- High-Speed Digital
- Low-Speed Digital
- V_{DD}
- V_{SS}

Downloaded from Datasheet.su

Figure 18-12. DS3254 SPI Bus Mode Pin Assignment

A1 $\overline{\text{RLOS1}}$	A2 RXN1	A3 RXP1	A4 N.C.	A5 T3MCLK	A6 TXN3	A7 TXP3	A8 TCLK3	A9 TPOS3	A10 RCLK3	A11 PRBS3	A12 $\overline{\text{RLOS3}}$
B1 PRBS1	B2 $\overline{\text{RTS1}}$	B3 N.C.	B4 N.C.	B5 $\overline{\text{WR}}$	B6 $\overline{\text{RD}}$	B7 $\overline{\text{CS}}$	B8 $\overline{\text{TTS3}}$	B9 TNEG3	B10 RPOS3	B11 $\overline{\text{RTS3}}$	B12 RXN3
C1 RCLK1	C2 RPOS1	C3 RNEG1	C4 N.C.	C5 $\overline{\text{INT}}$	C6 MOT	C7 N.C.	C8 N.C.	C9 $\overline{\text{TDM3}}$	C10 RNEG3	C11 N.C.	C12 RXP3
D1 TPOS1	D2 TNEG1	D3 $\overline{\text{TDM1}}$	D4 $\overline{\text{JTRST}}$	D5 JTMS	D6 V_{DD}	D7 V_{SS}	D8 N.C.	D9 N.C.	D10 N.C.	D11 N.C.	D12 N.C.
E1 TCLK1	E2 $\overline{\text{TTS1}}$	E3 SDO	E4 JTCLK	E5 V_{DD}	E6 V_{DD}	E7 V_{SS}	E8 V_{SS}	E9 HW	E10 N.C.	E11 N.C.	E12 E3MCLK
F1 TXP1	F2 SDI	F3 SCLK	F4 V_{DD}	F5 V_{DD}	F6 V_{DD}	F7 V_{SS}	F8 V_{SS}	F9 V_{SS}	F10 N.C.	F11 N.C.	F12 TXN2
G1 TXN1	G2 N.C.	G3 N.C.	G4 V_{SS}	G5 V_{SS}	G6 V_{SS}	G7 V_{DD}	G8 V_{DD}	G9 V_{DD}	G10 N.C.	G11 N.C.	G12 TXP2
H1 $\overline{\text{RST}}$	H2 N.C.	H3 CPHA	H4 JTDI	H5 V_{SS}	H6 V_{SS}	H7 V_{DD}	H8 V_{DD}	H9 N.C.	H10 N.C.	H11 $\overline{\text{TTS2}}$	H12 TCLK2
J1 N.C.	J2 N.C.	J3 CPOL	J4 JTDO	J5 $\overline{\text{TEST}}$	J6 V_{SS}	J7 V_{DD}	J8 $\overline{\text{HIZ}}$	J9 N.C.	J10 $\overline{\text{TDM2}}$	J11 TNEG2	J12 TPOS2
K1 RXP4	K2 N.C.	K3 RNEG4	K4 $\overline{\text{TDM4}}$	K5 N.C.	K6 N.C.	K7 N.C.	K8 N.C.	K9 N.C.	K10 RNEG2	K11 RPOS2	K12 RCLK2
L1 RXN4	L2 $\overline{\text{RTS4}}$	L3 RPOS4	L4 TNEG4	L5 $\overline{\text{TTS4}}$	L6 N.C.	L7 N.C.	L8 N.C.	L9 N.C.	L10 N.C.	L11 $\overline{\text{RTS2}}$	L12 PRBS2
M1 $\overline{\text{RLOS4}}$	M2 PRBS4	M3 RCLK4	M4 TPOS4	M5 TCLK4	M6 TXP4	M7 TXN4	M8 STMCLK	M9 N.C.	M10 RXP2	M11 RXN2	M12 $\overline{\text{RLOS2}}$

- High-Speed Analog
- High-Speed Digital
- Low-Speed Digital
- V_{DD}
- V_{SS}

Downloaded from Datasheet.su

19. PACKAGE INFORMATION

(The package drawing(s) in this data sheet may not reflect the most current specifications. For the latest package outline information, go to **www.maxim-ic.com/DallasPackInfo**.)

Note: *All dimensions in millimeters.*

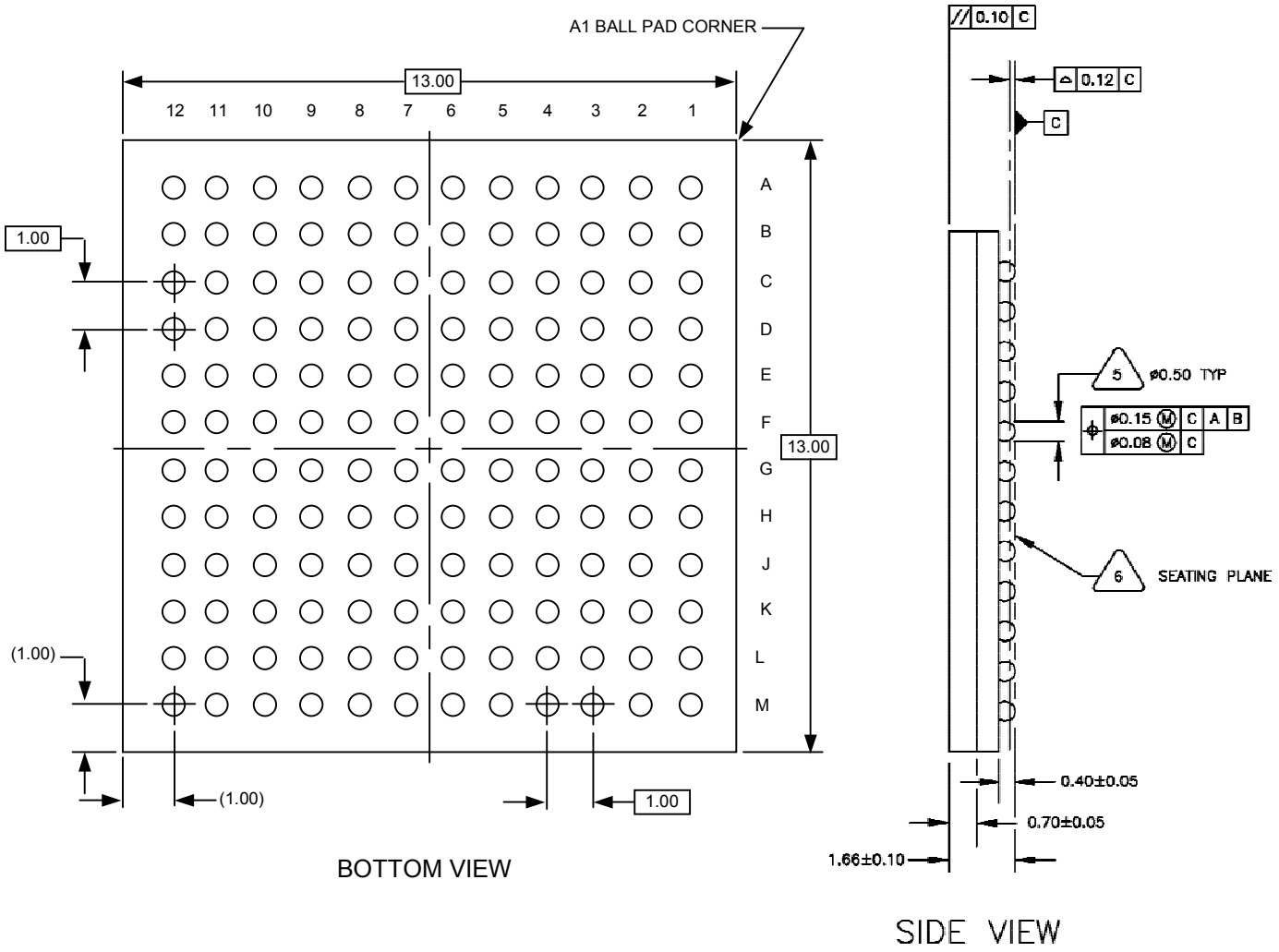

Downloaded from Datasheet.su

20. THERMAL INFORMATION

Table 20-A. Thermal Properties, Natural Convection

PARAMETER	MIN	TYP	MAX
Ambient Temperature (Note 1)	-40°C	—	+85°C
Junction Temperature	-40°C	—	+125°C
Theta-JA (θ_{JA}), Still Air (Note 2)		22.4°C/W	
Psi-JB		9.2°C/W	
Psi-JT		1.6°C/W	

Note 1: The package is mounted on a four-layer JEDEC standard test board with no airflow and dissipating maximum power.
Note 2: Theta-JA (θ_{JA}) is the junction to ambient thermal resistance, when the package is mounted on a four-layer JEDEC standard test board with no airflow and dissipating maximum power.

Table 20-B. Theta-JA (θ_{JA}) vs. Airflow

FORCED AIR (METERS PER SECOND)	THETA-JA (θ_{JA})
0	22.4°C/W
1	19.0°C/W
2.5	17.2°C/W

21. REVISION HISTORY

REVISION	DESCRIPTION
031805	New Product Release (DS3254)
061705	New Product Release (DS3251/DS3252/DS3253)

Maxim/Dallas Semiconductor cannot assume responsibility for use of any circuitry other than circuitry entirely embodied in a Maxim/Dallas Semiconductor product. No circuit patent licenses are implied. Maxim/Dallas Semiconductor reserves the right to change the circuitry and specifications without notice at any time.

Maxim Integrated Products, 120 San Gabriel Drive, Sunnyvale, CA 94086 408-737-7600

© 2005 Maxim Integrated Products • Printed USA

The Maxim logo is a registered trademark of Maxim Integrated Products, Inc. The Dallas logo is a registered trademark of Dallas Semiconductor Corporation.

Downloaded from Datasheet.su