MAJOR LEAGUE ELECTRONICS

2mm (.079") c.l. Board Stacker Terminal Strips-Custom

FastBall Delivery 3/5 Days to You!

High Temp

☐BSTC-2☐☐-☐-☐☐☐-☐☐-☐☐-☐☐☐☐-☐☐-☐☐☐

Mates with: SSHS, SSHR, SH, BSSH, SSHSM, BSSHC

H High Temp.

Pins per row 01-50

Singles S
Doubles D

Desired Tail Height

Lead Style Chart

Length	
(6,48) .255	01
(8,20) .323	02
(10,08) .397	04
(10,59) .417	06
(11,58) .456	07
(14,10) .555	08
(14,61) .575	10
(15,09) .594	12
(15,60) .614	14
(16,18) .637	16
(19,10) .752	18
(21,11) .831	20

(Metric Dimensions)

Plating Options

G = 10µ in gold in contact area, gold flash on tail	G
GT = 10µ in gold in contact area, 200µ in tin/lead on tail	GT
H = 30µ gold on contact area, 200µ in tin/lead on tail	H
T = 200µ in tin/lead over entire pin	T

Other plating options available upon request

Board Space (.120 minimum)

Lock Tight Option LT

Two tails per strip are crimped in opposing directions on or near the centerline. Must have a minimum tail dimension of .090". Recommended hole size of .032"

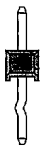

Position for Polarization Option 001-100

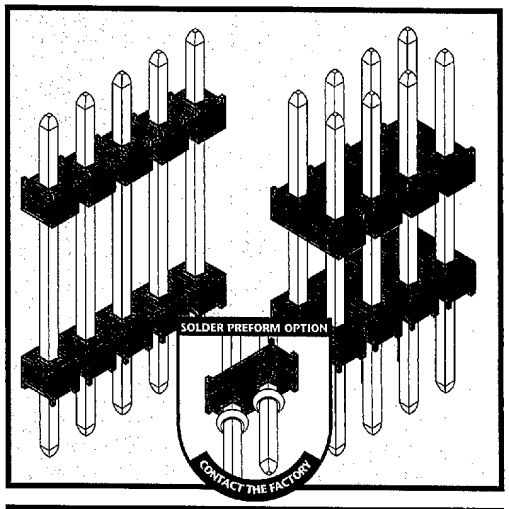

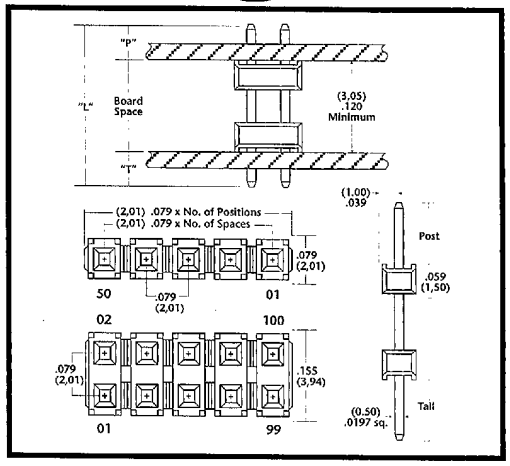

EXAMPLE: You select the "tail" height and "board" spacing that you want; listed below are several examples. **Formula: "L"ength - "T"ail - "B"oard =**

STANDARD TEMPERATURE EXAMPLES

Part Number	"L"ength	"T"ail	"B"oard	"P"ost
BSTC-2XX-X-130-02-XX-080	(8,20) .323	(3,30) .130	(1,78) .080	(3,12) .113
BSTC-2XX-X-090-02-XX-120	(8,20) .323	(2,29) .090	(3,05) 0.120	(3,12) .113
BSTC-2XX-X-100-02-XX-150	(8,20) .323	(2,54) .100	(3,81) 0.150	(1,86) .073
BSTC-2XX-X-125-04-XX-165	(10,08) .397	(3,05) .125	(4,19) 0.165	(2,72) .112
BSTC-2XX-X-150-04-XX-180	(10,08) .397	(3,82) .150	(4,57) 0.180	(1,70) .067

HIGH TEMPERATURE EXAMPLES

Part Number	"L"ength	"T"ail	"B"oard	"P"ost
HBSTC-2XX-X-150-06-XX-120	(10,59) .417	(3,82) .150	(3,05) .120	(3,74) .147
HBSTC-2XX-X-120-06-XX-150	(10,59) .417	(3,05) .120	(3,81) .150	(3,74) .147
HBSTC-2XX-X-165-08-XX-175	(14,10) .555	(4,19) .165	(4,44) .175	(5,47) .215
HBSTC-2XX-X-200-08-XX-200	(14,10) .555	(5,08) .200	(5,08) .200	(3,94) .155
HBSTC-2XX-X-250-10-XX-225	(14,61) .575	(6,36) .250	(5,71) .225	(2,54) .100

APPLICATION

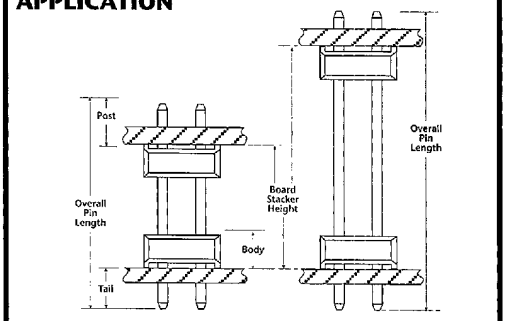

Custom Board Stackers

Product cut to specific sizes is noncancellable/nonreturnable.
Parts are subject to change without notice.

Materials & Performance Specifications

	STANDARD	HIGH TEMPERATURE
Insulator	Black, glass filled, polyester	High temperature thermoplastic
Terminal	Phosphor Bronze	Phosphor Bronze
Insulation Resistance	5,000M Ω minimum	5,000M Ω minimum
Flammability	UL 94V-O	UL 94V-O
Temperature Range	-65°C to +125°C	-65°C to +250°C
Current Rating	2 ampere	2 ampere
Plating	All Plating Options over 50µ in Ni	All Plating Options over 50µ in Ni

Delivery On Time Every Time...Or The Order's Free!

D 24F 9019296 0000045 T21

Phone: 812-944-7244 • Facsimile: 812-944-7268 • Email: mle@iglou.com

Downloaded from Datasheet.su