MICRO SWITCH
FREEPORT ILLINOIS, U.S.A
A DIVISION OF HONEYWELL
FED. MFG. CODE 91929

SWITCH – BASIC

CATALOG LISTING
YA-1R5435242-A2

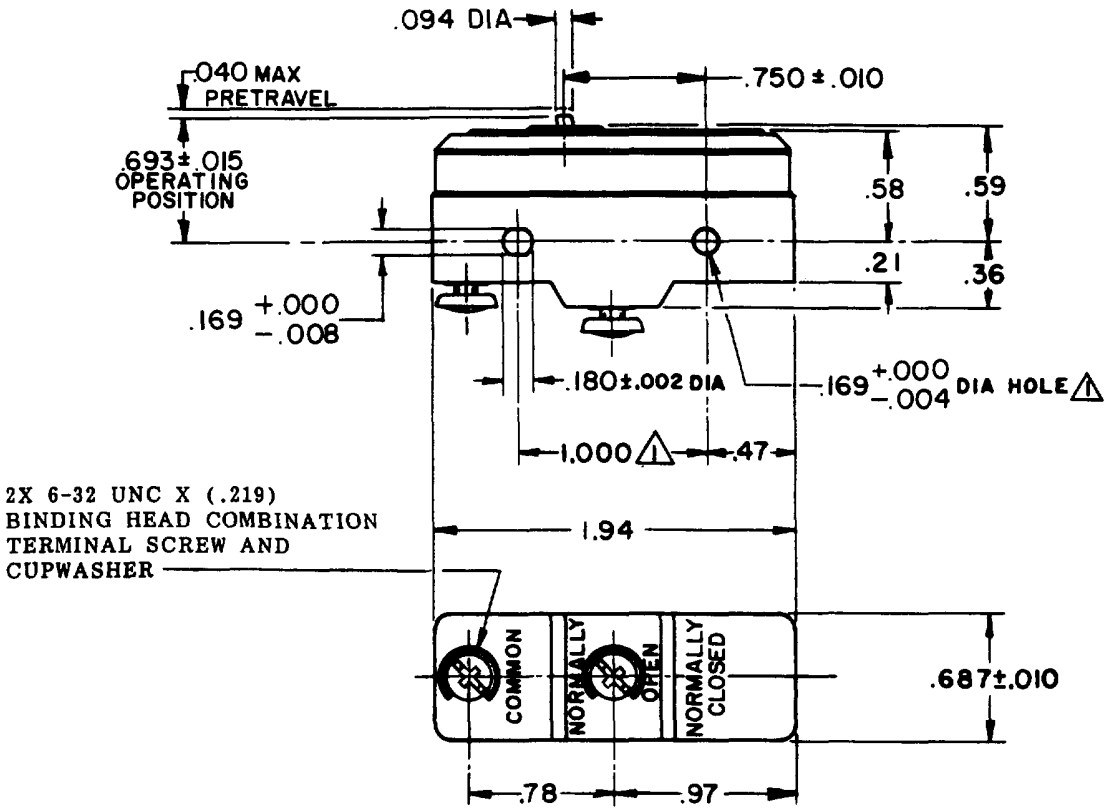

NOTES

⚠ MOUNTING HOLES WILL ACCEPT PINS OR SCREWS OF .168 MAX DIA ON 1.000 ± .002 CENTERS

2.-SWITCH WILL WITHSTAND TEMPERATURE OF 250 ° F

THIS DRAWING COVERS A PROPRIETARY ITEM AND IS THE PROPERTY OF MICRO SWITCH, A DIVISION OF HONEYWELL. THIS DRAWING IS NOT TO BE COPIED OR USED WITHOUT THE APPROVAL OF MICRO SWITCH.

THIRD ANGLE PROJECTION

CHARACTERISTICS

OPERATING FORCE — — — — 9 OZ MAX

RELEASE FORCE — — — — — 4 OZ MIN

DIFFERENTIAL TRAVEL — — .0025 — .0040

OVERTRAVEL — — — — — — — — .010 MIN

ELECTRICAL DATA

CONTACT ARRANGEMENT
S P N O

UL LISTED – FILE E12252

CODE L65 15A–125, 250 OR 480 VAC
1/2HP - 125 VAC; 1HP - 250 VAC

L288
L299
L306

16A 250V ∼ T85 5E4

SCALE FULL

DO NOT SCALE PRINT

TOLERANCES
APPLY TO DESIGN UNITS. CONVERSIONS ARE ONLY FOR REFERENCE. UNLESS NOTED, TOLERANCES ARE ±

	DIM. mm	TOL. mm/in	DIM. in	TOL. mm/in
NO PLACES	X	1/.04		
ONE PLACE	X.X	0.4/.016	X.X	0.8/.03
TWO PLACES	X.XX	0.15/.006	X.XX	0.38/.015
THREE PLACES			X.XXX	0.13/.005
ANGLES				

DESIGN UNITS SI METRIC ☐ US CUSTOMARY ■

WEIGHT .065 LB

YA-1R5435242-A2 PAGE 1 OF 1
M
DRAWING NUMBER
ISSUE 3
RELEASE NO. PR-5263
REPLACES

REVISIONS
A CO-73287-J JAL 22 NOV 93
B C093346 DLT 31 AUG 98

CHECK		
	CUT	25 SEP 75
CHECK		
	LSD	25 SEP 75
CHECK		
	GLH	24 SEPT 75

FORMTEK
FO-52848-A
DRAWN

Downloaded from Datasheet.su