180-049
Feedthrough Probe Connector
to M29504/4 Pin Terminus

180-049 C

Product Series
Basic Number
Finish Symbol
C = Black Anodize
M = Electroless Nickel

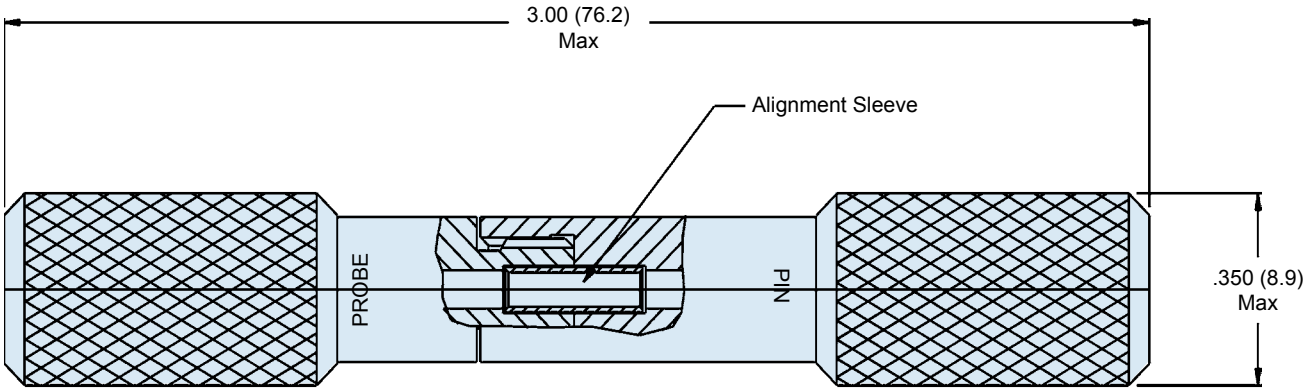

Accepts 181-002 and MIL-PRF-29504/ 4 Pin Terminus

U.S. PATENT 5,960,137

APPLICATION NOTES

1. Metric dimensions (mm) are in parentheses and are for reference only.
2. Assembly to be indentified with “Probe” and “Pin.”
3. Material/Finish:
   Housing - Aluminum Alloy/See Part Number Development
   Alignment Sleeve - Zirconia Ceramic/N.A.
   Retaining Clips - Beryllium Copper/N/A.
4. Metric Dimensions (mm) are indicated in parentheses.

© 2006 Glenair, Inc. CAGE Code 06324 Printed in U.S.A.

Downloaded from Datasheet.su