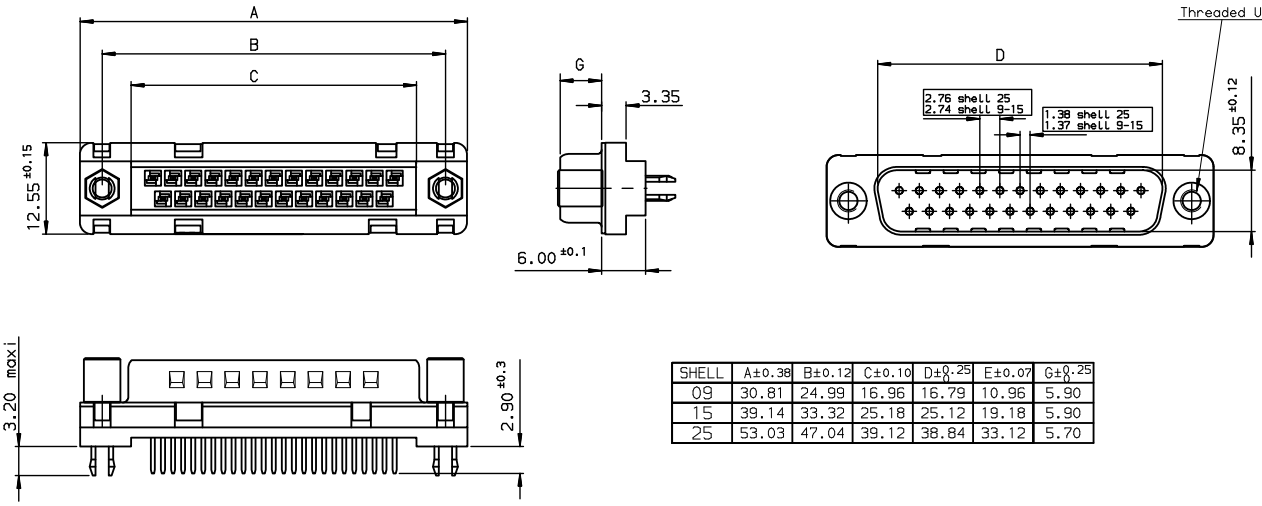

SHELL	A±0.38	B±0.12	C±0.10	D±0.25	E±0.07	G±0.25
09	30.81	24.99	16.96	16.79	10.96	5.90
15	39.14	33.32	25.18	25.12	19.18	5.90
25	53.03	47.04	39.12	38.84	33.12	5.70

Core range

SHELL	TIN LEAD P/N	LEAD FREE P/N	DESIGNATIONS
09	D09P24A4GV00	D09P24A4GV00LF	HEADER 9 CTS STRAIGHT -SOLDER TO BOARD-PCB HARPOON-SCREWLOCK UNC 4.40-ELEC.CONTIN.-PERFORM. LEVEL PL3
15	D15P24A4GV00	D15P24A4GV00LF	HEADER 15 CTS STRAIGHT-SOLDER TO BOARD-PCB HARPOON-SCREWLOCK UNC 4.40-ELEC.CONTIN.-PERFORM. LEVEL PL3
25	D25P24A4GV00	D25P24A4GV00LF	HEADER 25 CTS STRAIGHT-SOLDER TO BOARD-PCB HARPOON-SCREWLOCK UNC 4.40-ELEC.CONTIN.-PERFORM. LEVEL PL3

PC card drilling dimensions(after plating)

(thickness 1.60±0.20mm)

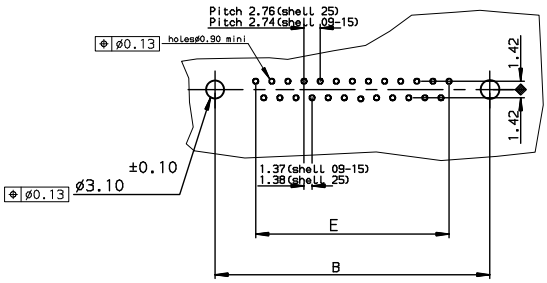

GENERAL CHARACTERISTICS AND ROHS INFORMATIONS:
SEE DRAWING C01-8646-0000

European Views

rev	ecn no	dr	date
D	-	SBA	2003/04/16
E	LS05-0056	LGO	2005/07/07
F	LS06-0097	LGO	2006/07/29
-	-	-	-
-	-	-	-
-	-	-	-
-	-	-	-

www.fciconnect.com

surface ISO 1302 — tolerance std ISO 406 ISO 1101 — TOLERANCES UNLESS OTHERWISE SPECIFIED — projection — mm

Dr	JARRY	1995/08/11	ANGULAR	0.X	±0.1
Eng	PESSON	1995/08/11	LINEAR	0.XX	±0.1
Chr	LEGARE	1995/08/11	0.X° ±2°	0.XXX	±0.1
Appr	LEGARE	1995/08/11	Product family	D-SUB	

size A3 — Scale 2 — ECN LS06-0097 — Spec ref -

Title: HDR DELTA D STD EUROPE straight, solder type for PCB 1.6mm

dwg no C01-8646-100-1 — Rev. F

catalog no - — CUSTOMER — sheet 1 of 1

REV F - 2006-04-17

Copyright FCI.

PDM: Rev:F STATUS:Released Printed: Aug 27, 2006

Downloaded from Datasheet.su