SINGLE ROW (1 YO)

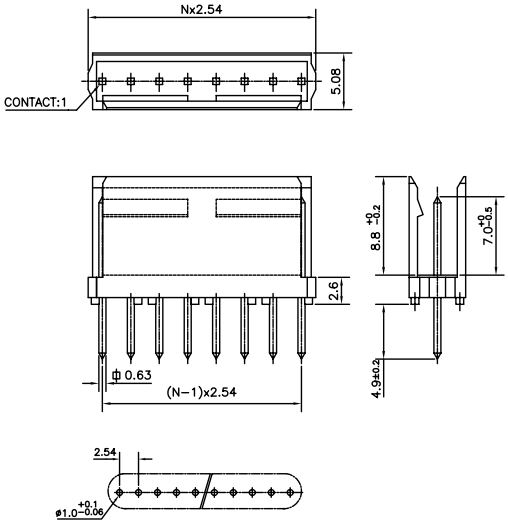

PCB DRILLING DETAILS

DOUBLE ROW (2 YO)

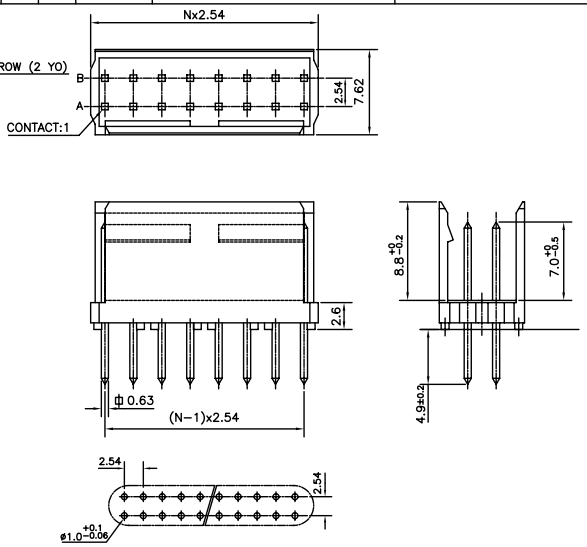

PCB DRILLING DETAILS

ORDERING INFORMATION

8614 – 20 – XX – X – XX– X – 063 – XX

- 8614 SERIES
- 20– SHROUDED MALE
- NO.OF CONTACTS: 2 TO 25,4 TO 50
- NO.OF ROWS: 1 – SINGLE ROW; 2 – DUAL ROW
- YO – STRAIGHT SOLDER
- PLATING:
  - 1 – TIN LEAD
  - 2 – 0.2 µAu
  - 3 – 0.75 µAu SELECTIVE
  - 4 – 0.2 µAu SELECTIVE
  - 5 – 1.27µ Au SELECTIVE
  - 6 – 0.75µ Au
  - 7 – GOLD FLASH
  - 8 – 1.27µ Au SELECTIVE
  - 9 – 0.4µ FULL GOLD
  - 10 – FULL GOLD FLASH
- 063–TERMINAL HEIGHT–4.9
- LF :–LEAD FREE

TECHNICAL SPECIFICATION

INSULATOR MATERIAL	:	SELF EXTINGUISHING THERMOPLASTIC (UL94 VO)
CONTACT MATERIAL	:	COPPER ALLOY
MAXIMUM VOLTAGE	:	1000 V rms.
NOMINAL CURRENT	:	3A AT 20°C
INSULATION RESISTANCE	:	⩾ 5000 MΩ
CONTACT RESISTANCE	:	⩽ 20 mΩ
CLIMATIC CATAGORY	:	−55°C TO +125°C / 21 DAYS EXPOSURE TO– INDUSTRIAL ENVIRONMENT HUMIDITY TEST AS HE–14.

Notes:
1, THE PRODUCT (LF) MEETS EUROPEAN UNION DIRECTIVES AND OTHER COUNTRY REGULATIONS AS DESCRIBED IN GS–22–008

ltr	ecn no	dr	date
B	I06-0129	AB	2006-07-22

mat'l. code: REF TECH SPEC
surface: ISO 1302
tolerance: ISO 406 ISO 1101
tolerances unless otherwise specified: angles 0°±1°; linear .0±0.1
projection
MM
scale –

dr	MINI K VANDANATH	2000-03-17
engr	ELIAS.C.T	2000-03-17
chr	ALEX BABU	2006-07-22
appd	BIJU K.P	2006-07-22

product family: 8614
title: SHROUDED MALE CONNECTOR (STRAIGHT SOLDER)
dwg no: C-8614-0098
sheet 1 of 1
size: A3
type: Product Customer Drawing

sheet index	revision	B
	sheet	1

form: A3

PDM: Rev:B STATUS:Released Printed: Aug 04, 2006

FCIconnect.com
Copyright FCI

Downloaded from Datasheet.su