PRODUCT NUMBER	SEE SHEET 2

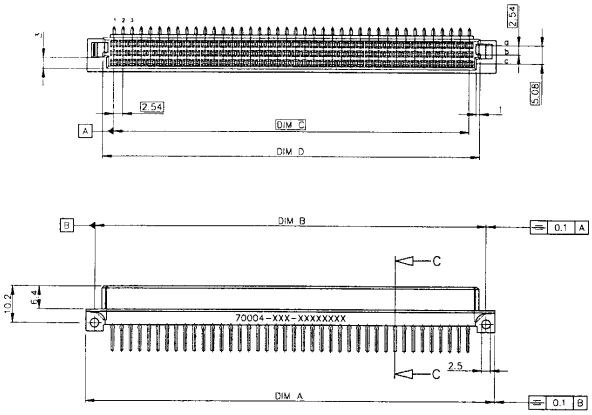

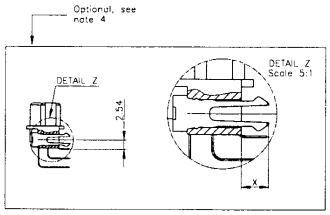

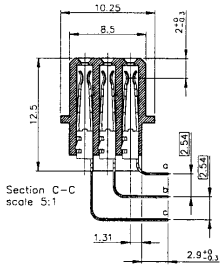

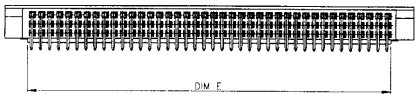

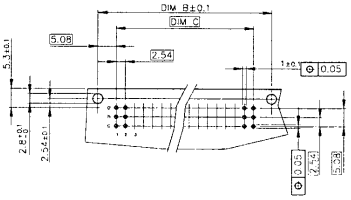

NOTES:

1. Material body: Thermoplastic polyester 30% glass filled, colour grey, flame retardant per UL-94-V0
   Material terminal: Phosphor bronze
2. All dimensions are according to DIN 41612 style R
3. Laser printing consists of 70004-XXX-0Z-XXXXXXXX according to DIN 30640
   - PRODUCT NR
   - PLATING CODE X
   - LOADING CODE
   - CLIP CODE (optional)
   - BATCH CODE
4. As an option the 70004 connector is available with a board fixing clip (for 3x16 only). The p/n is then 70004-XXX-0Z

| PART CODE | SEE NOTE 1 | | |

PRODUCT NR	ROW	1	2	3	4	5	6	7	8	9	10	11	12	13	14	15	16	17	18	19	20	21	22	23	24	25	26	27	28	29	30	31	32	33	34	35	36	37	38	39	40
70004-001	a	X	X	X	X	X	X	X	X	X	X	X	X	X	X	X	X	X	X	X	X	X	X	X	X	X	X	X	X	X	X	X	X	X	X	X	X	X	X	X	X
	b	X	X	X	X	X	X	X	X	X	X	X	X	X	X	X	X	X	X	X	X	X	X	X	X	X	X	X	X	X	X	X	X	X	X	X	X	X	X	X	X
	c	X	X	X	X	X	X	X	X	X	X	X	X	X	X	X	X	X	X	X	X	X	X	X	X	X	X	X	X	X	X	X	X	X	X	X	X	X	X	X	X
70004-002	a	X	X	X	X	X	X	X	X	X	X	X	X	X	X	X	X																								
	b	X	X	X	X	X	X	X	X	X	X	X	X	X	X	X	X																								
	c	X	X	X	X	X	X	X	X	X	X	X	X	X	X	X	X																								
70004-003	a	X	X	X	X	X	X	X	X	X	X	X	X	X	X	X	X	X	X	X	X	X	X	X	X	X	X	X	X	X	X	X	X	X	X	X	X	X	X	X	X
	b																																								
	c	X	X	X	X	X	X	X	X	X	X	X	X	X	X	X	X	X	X	X	X	X	X	X	X	X	X	X	X	X	X	X	X	X	X	X	X	X	X	X	X
70004-004	a	X	X	X	X	X	X	X	X	X	X	X	X	X	X	X	X																								
	b	X	X	X	X	X	X	X	X	X	X	X	X	X	X	X	X																								
	c	X	X	X	X	X	X	X	X	X	X	X	X	X	X	X	X																								
70004-005	a		X		X		X		X		X		X		X		X																								
	b																																								
	c		X		X		X		X		X		X		X		X																								
70004-006	a	X	X	X	X	X	X	X	X	X	X	X	X	X	X	X	X	X	X	X	X	X	X	X	X	X	X	X	X	X	X	X	X	X	X	X	X	X	X	X	X
	b	X	X	X	X	X	X	X	X	X	X	X	X	X	X	X	X	X	X	X	X	X	X	X	X	X	X	X	X	X	X	X	X	X	X	X	X	X	X	X	X
	c	X	X	X	X	X	X	X	X	X	X	X	X	X	X	X	X	X	X	X	X	X	X	X	X	X	X	X	X	X	X	X	X	X	X	X	X	X	X	X	X
70004-007	a		X		X		X		X		X		X		X		X																								
	b																																								
	c		X		X		X		X		X		X		X		X																								
70004-008	a																																								
	b																																								
	c																																								
70004-009	a	X	X	X	X	X	X	X	X	X	X	X	X	X	X	X	X																								
	b																																								
	c	X	X	X	X	X	X	X	X	X	X	X	X	X	X	X	X																								
70004-010	a	X	X	X	X	X	X	X	X	X	X	X	X	X	X	X	X																								
	b	X	X	X	X	X	X	X	X	X	X	X	X	X	X	X	X																								
	c	X	X	X	X	X	X	X	X	X	X	X	X	X	X	X	X																								
70004-011	a	X	X	X	X	X	X	X	X	X	X	X	X	X	X	X	X																								
	b	X	X	X	X	X	X	X	X	X	X	X	X	X	X	X	X																								
	c	X	X	X	X	X	X	X	X	X	X	X	X	X	X	X	X																								
70004-012	a	X	X	X	X	X	X	X	X	X	X	X				X	X																								
	b																																								
	c	X	X	X	X	X	X	X	X	X	X	X				X	X																								
70004-013	a	X	X	X	X	X	X	X	X	X	X	X	X	X	X	X	X																								
	b																																								
	c	X	X	X	X	X	X	X	X	X	X	X	X	X	X	X	X																								
70004-014	a	X	X		X	X	X	X	X	X	X	X	X	X	X	X	X																								
	b	X	X		X	X	X	X	X	X	X	X	X	X	X	X	X																								
	c	X	X		X	X	X	X	X	X	X	X	X	X	X	X	X																								
70004-015	a	X	X	X	X	X	X	X	X	X	X	X	X	X		X	X																								
	b	X	X	X	X	X	X	X	X	X	X	X	X	X		X	X																								
	c	X	X	X	X	X	X	X	X	X	X	X	X	X		X	X																								

PRODUCT NR	PLATING OF CONTACT AREA	SOLDER TAB.	DIM A	DIM B	DIM C	DIM D	DIM E	REMARKS
70004-001	0.8μm Au min over 3μm Ni min	TIN/LEAD	114.22	109.22	99.06	105.22	101.3	3x40 POS.
70004-002	0.8μm Au min over 3μm Ni min	TIN/LEAD	53.26	48.26	38.1	44.26	53.26	3x16 POS.
70004-003	0.8μm Au min over 3μm Ni min	TIN/LEAD	114.22	109.22	99.06	105.22	101.3	3x40 POS.
70004-004	0.5μm Au min over 3μm Ni min	TIN/LEAD	53.26	48.26	38.1	44.26	53.26	3x16 POS.
70004-005	3μm Au min over 3μm Ni min	TIN/LEAD	53.26	48.26	38.1	44.26	53.26	3x16 POS.
70004-006	0.5μm Au min over 3μm Ni min	TIN/LEAD	114.22	109.22	99.06	105.22	101.3	3x40 POS.
70004-007	0.5μm Au min over 3μm Ni min	TIN/LEAD	53.26	48.26	38.1	44.26	53.26	3x16 POS.
70004-008								
70004-009	1μm Au min over 3μm Ni min	TIN/LEAD	53.26	48.26	38.1	44.26	53.26	3x16 POS.
70004-010	2μm Au min over 3μm Ni min	TIN/LEAD	53.26	48.26	38.1	44.26	53.26	3x16 POS.
70004-011	3μm Au min over 3μm Ni min	TIN/LEAD	53.26	48.26	38.1	44.26	53.26	3x16 POS.
70004-012	0.8μm Au min over 3μm Ni min	TIN/LEAD	53.26	48.26	38.1	44.26	53.26	3x16 POS.
70004-013	0.8μm Au min over 3μm Ni min	TIN/LEAD	53.26	48.26	38.1	44.26	53.26	3x16 POS.
70004-014	0.8μm Au min over 3μm Ni min	TIN/LEAD	53.26	48.26	38.1	44.26	53.26	3x16 POS.
70004-015	0.8μm Au min over 3μm Ni min	TIN/LEAD	53.26	48.26	38.1	44.26	53.26	3x16 POS.

PRODUCT NR (See note 4)	PCB THICKNESS (mm)	DIMENSION X (mm)
70004-XXX-01	1.6	3.0

ltr	ecn no	dr	date
G	H50803	ODB	951016
H	H60165	ODB	960305
J	H80283	VIB	980511
K	H80865	ODH	981204
L	H90298	ODB	990714
F	H40587	ODH	940920

mat'l code: --

tolerances unless otherwise specified: linear, angles

dr: H. v. Schaijk 901208; engr: R. Bakker 940920; chk: M. Loman 901208; appd: H. de Smoker 980213

CUSTOMER COPY

projection; mm; scale: --

FCI ELECTRONICS www.fciconnect.com

title: Receptacle R-DIN 3x16/3x40

product family: BACKPANEL; code: 21.3

size: A1; dwg no: 70004; sheet 2 of -

Downloaded from Datasheet.su