**MICRO SWITCH**
A DIVISION OF MINNEAPOLIS-HONEYWELL REGULATOR COMPANY
FREEPORT ILLINOIS

FED. MFR. CODE 91929

# SWITCH-ENCLOSED

CATALOG LISTING
**EX-AR87**

N 0012750
KR 27APR05

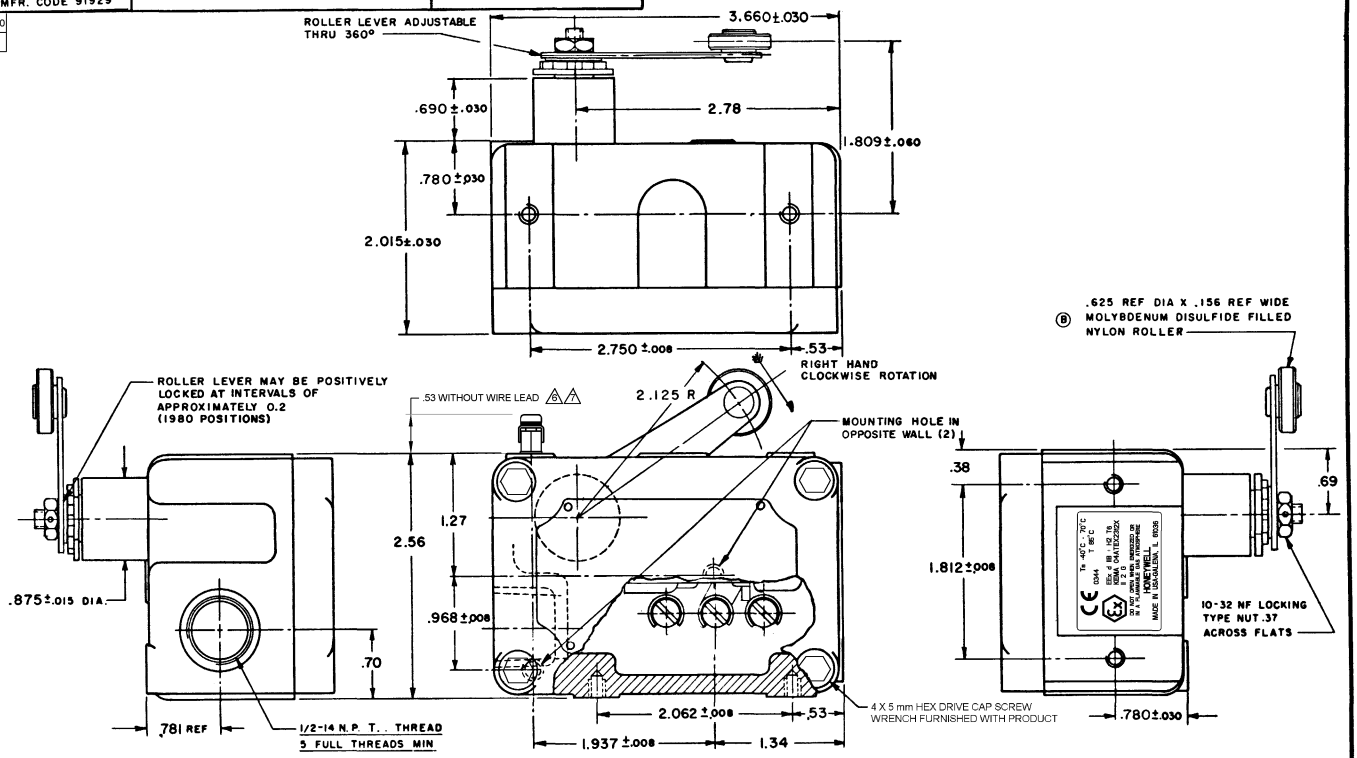


THIS DRAWING COVERS A PROPRIETARY ITEM AND IS THE PROPERTY OF MICRO SWITCH, A DIVISION OF MINNEAPOLIS-HONEYWELL REGULATOR CO. THIS DRAWING IS NOT TO BE COPIED OR USED WITHOUT THE APPROVAL OF MICRO SWITCH.

| CHARACTERISTICS | ELECTRICAL DATA | | |
|---|---|---|---|
| OPERATING FORCE — — — — 16 OZ MAX | CONTACT ARRANGEMENT | BREAK DISTANCE | SCALE FULL |
| RELEASE FORCE — — — — — — 3 OZ MIN | S P D T | .020 MIN | DO NOT SCALE PRINT |
| PRETRAVEL — — — — — — — .300 MAX | -L96- 15 A-125, 250, OR 480 VAC; 1/2 A-125 VDC; 1/4 A-250 VDC; 1/8 HP-125 VAC; 1/4 HP-250 VAC | | UNLESS OTHERWISE SPECIFIED DIMENSIONS ARE IN INCHES |
| DIFFERENTIAL TRAVEL — — — — — .010 MAX | | | TOLERANCES ARE: ONE PLACE (.0) ±.030; TWO PLACE (.00) ±.015; THREE PLACE (.000) ±.008; ANGLES ± |
| DO NOT OVERTRAVEL MORE THAN — — 90° | | | |
| SWITCH-BASIC REPLACEMENT- BZ-2R-P4 | | | WEIGHT |

NOTE—
1 - MOUNTING SCREW HOLE, 10-32 NF-2B THREADS X .219 REF DEEP (8)
2 - 8-32 NC X .219 REF TERMINAL SCREWS AND CUPWASHERS
3 - EXPLOSION PROOF—UNDERWRITER'S LAB INC LISTING FOR HAZARDOUS LOCATIONS NEMA 7, CLASS I, GROUPS C AND D, NEMA 9, CLASS II GROUPS E, F AND G
4 - EUROPEAN HAZARDOUS LOCATIONS DESIGNATION: EEx d IIB + H2 T6 CATAGORY II 2 G
5 - SEAL RATING: NEMA 1
6 EXTERNAL GROUND SCREW MAY BE ASSEMBLED TO ANY UNUSED MOUNTING SCREW HOLE
7 ASSEMBLE PROVIDED SPLIT LOCKWASHER BETWEEN GROUND LUG AND HOUSING

| | |
|---|---|
| DRAWING NUMBER | EX-AR87 |
| RELEASE NO. | PR-6803 |
| REPLACES | |
| ISSUE | 12 |
| DRAWN | MBF 17 JULY 62 |
| CHECK | AK 27APR05 |
| CHECK | EB 2 JULY 62 |
| CHECK | EB 2 JULY 62 |
| CHECK | EJ 2 JULY 62 |
| CHECK | AA 2 JULY 62 |

REVISIONS
A CORR MBF 16 NOV 62
B CORR DMW 29 JAN 63
C MADE ETS RER 21 MAY 68
D C02610 3 DLF 18 JUL 68
G C031559 GLH 18 JUN 73
H PR-6803 TMM 26 OCT 77
J CO 58360 CSH 9 NOV 85
K C061381 DAW 22 APR 87
L CO 707158 TSM 10 OCT 91
M C073019 MAV 19 SEP 92

FC-80378.003