SERIES 700 SWITCHES

PUSHBUTTON SWITCHES - SNAP-ACTING

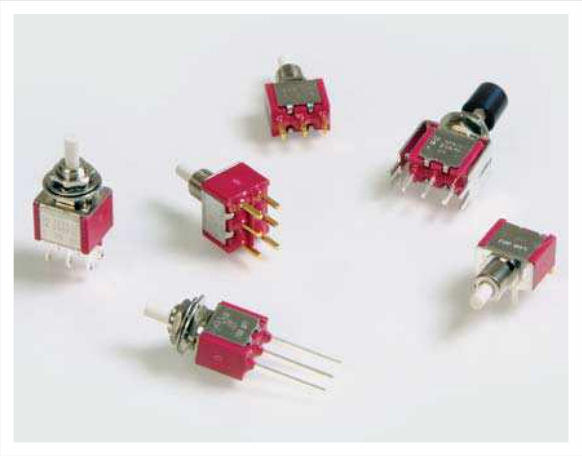

SPECIFICATIONS

Contact Ratings:	1A @ 250 VAC 3A @ 120 VAC or 28 VDC
Life Expectancy:	50,000 cycles typical
Contact Resistance:	20mΩ max. typical @ 2-4 VDC 100mA for both silver and gold plated contacts
Insulation Resistance:	1,000 MΩ min.
Dielectric Strength:	1,000 V RMS @ sea level
Actuation Force:	200 ± 50 gf
Operating Temperature:	-30°C to +85°C
Travel:	1.20mm Typ

MATERIALS

Case:	DAP
Plunger:	Glass filled nylon or glass filled polyester
Bushing:	Nickel plated brass
Frame:	Stainless steel
Contacts:	Silver or Gold plated copper alloy

FEATURES & BENEFITS

- Snap acting contact design
- Gold & silver contact options
- Multiple termination options
- Snap-in panel mount option

APPLICATIONS/MARKETS

- Telecommunications
- Networking
- Computers/servers
- Performance audio
- Instrumentation
- Low power on/off designs
- External hard drives and modems

HOW TO ORDER

SERIES	MODEL NO.	BUSHING	TERMINATION	CONTACT MATERIAL	SEAL	HARDWARE	CAP	CAP COLOR
700	SP7 DP7	B10 B11 B20 B21	M1 VS2 M2 VS3 M51 VS4 M52 VS5 M53 M6 M7	Q = Silver R = Gold	E = Epoxy Sealed at Base of Terminal	H = Hardware	See Cap Options	

Example Ordering Number

700–DP7–B10–M1–Q–E–H–C1–BLK

Specifications subject to change without notice.

SPDT

Model No.	Type	
SP-7	ON	(ON)
Term. Comm	1-3	1-2

( ) = Momentary

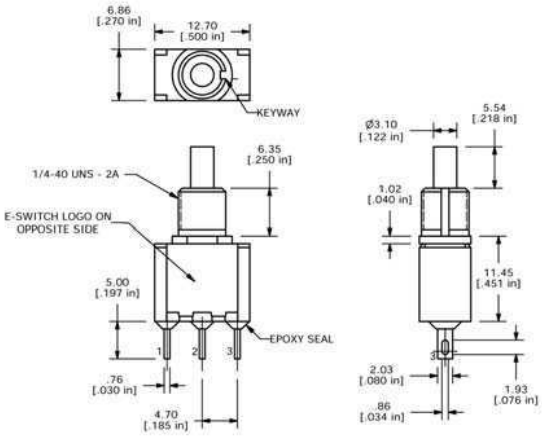

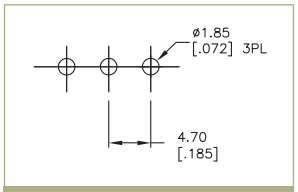

P.C. MOUNTING

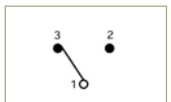

SCHEMATIC

E•SWITCH®
Phone: 800-867-2717
Fax: 763-531-8235

Downloaded from Datasheet.su

DPDT

Model No.	Type	
DP-7	ON	(ON)
Term. Comm.	1-3, 4-6	1-2, 4-5

( ) = Momentary

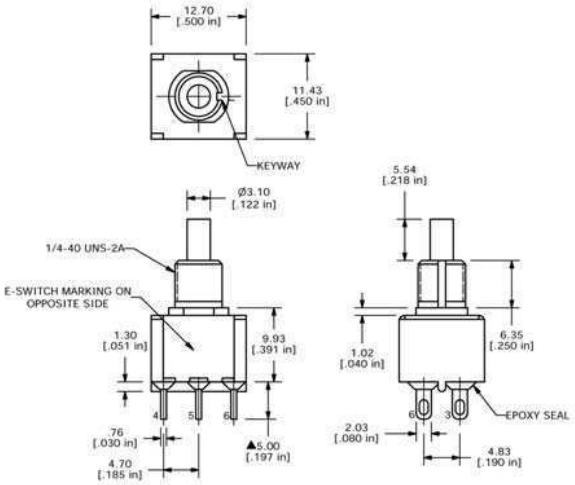

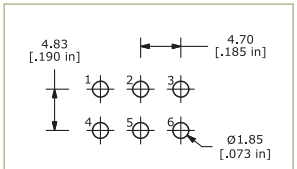

P.C. MOUNTING

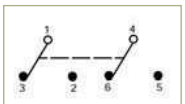

SCHEMATIC

BUSHING OPTIONS FOR P.C. MOUNTING

KEYWAY

B10 THD STD

B20 NON-THD

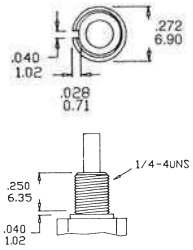

FLAT

B11 THD STD

B21 NON-THD

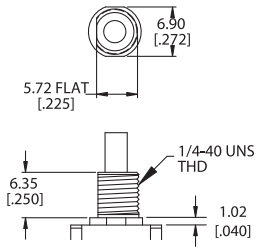

TERMINATION OPTIONS

M1

SOLDER LUG

M2

P. C. MOUNT

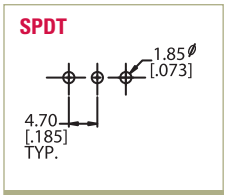

P.C. MOUNTING

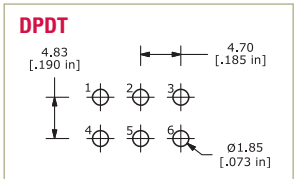

P.C. MOUNTING

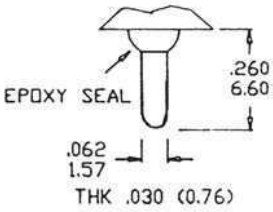

M5

WIRE WRAP

Option Code	Dim. 'A'
M51	.750 (19.05)
M52	.964 (24.48)
M53	.425 (10.80)

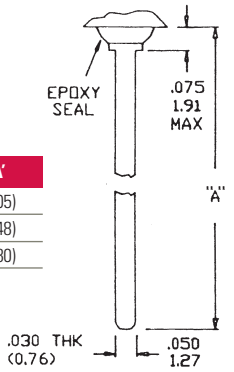

Downloaded from Datasheet.su

SERIES 700 SWITCHES

PUSHBUTTON SWITCHES - SNAP-ACTING

M6

SPDT

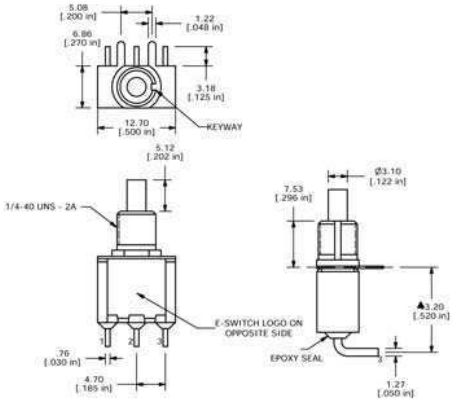

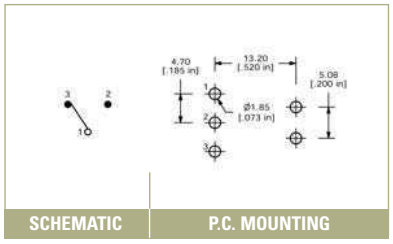

SCHEMATIC | P.C. MOUNTING

M6

DPDT

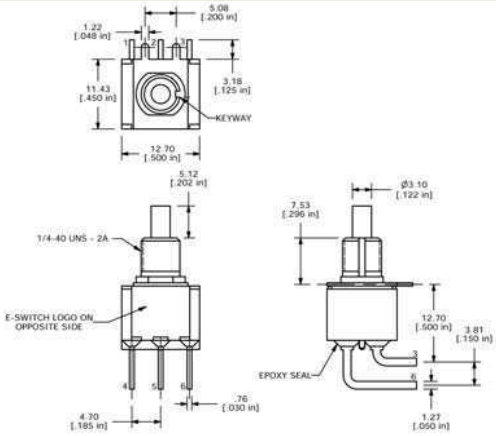

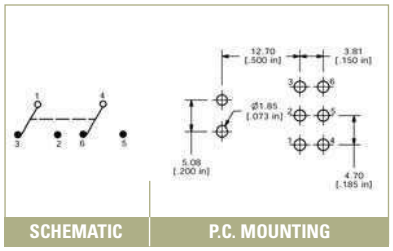

SCHEMATIC | P.C. MOUNTING

M7

SPDT

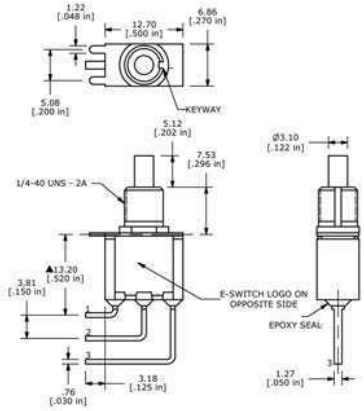

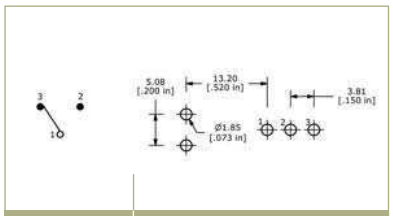

SCHEMATIC | P.C. MOUNTING

M7

DPDT

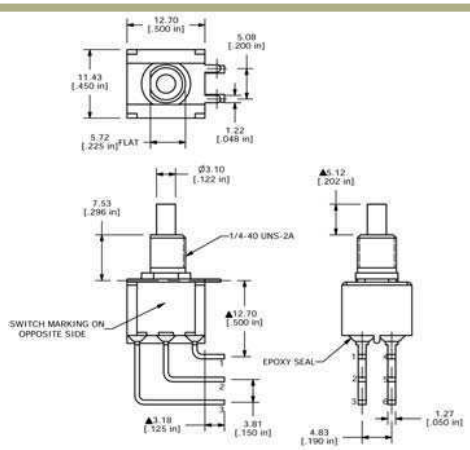

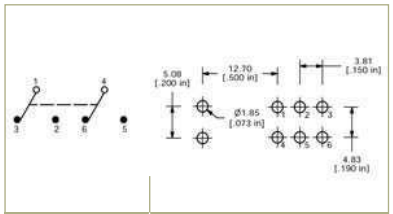

SCHEMATIC | P.C. MOUNTING

E-SWITCH®
Phone: 800-867-2717
Fax: 763-531-8235

Downloaded from Datasheet.su

VS2 or VS3

SPDT

Option Code	Dim. 'A'
VS2	.460 (11.68)
VS3	.630 (16.00)

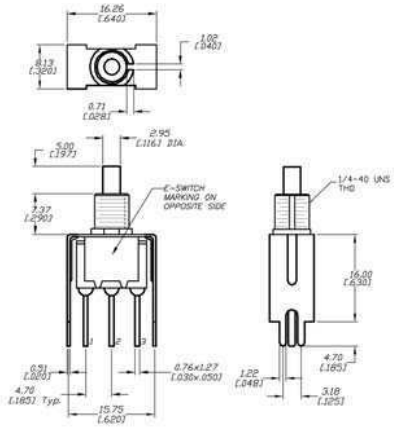

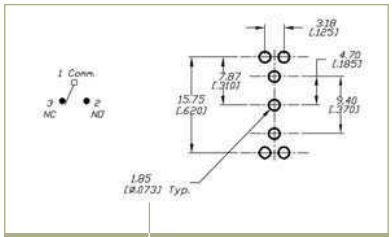

SCHEMATIC | P.C. MOUNTING

VS2 or VS3

DPDT

Option Code	Dim. 'A'
VS2	.460 (11.68)
VS3	.630 (16.00)

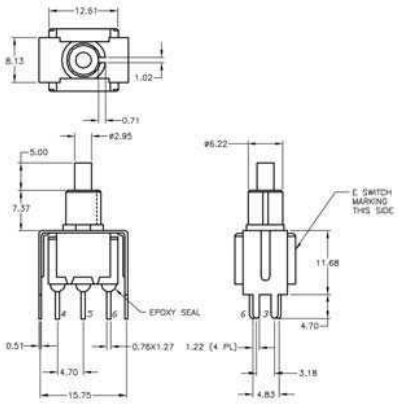

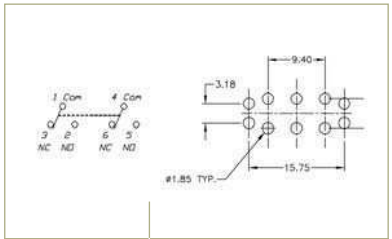

SCHEMATIC | P.C. MOUNTING

VS4 or VS5

SPDT

Option Code	Dim. 'A'
VS4	.460 (11.68)
VS5	.630 (16.00)

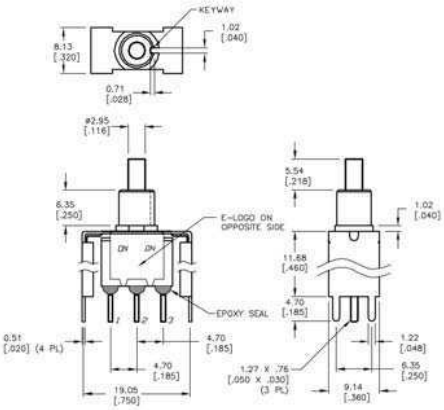

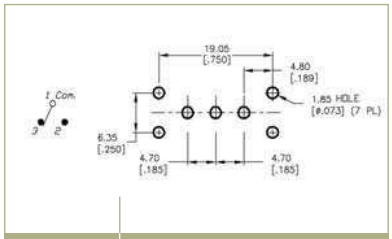

SCHEMATIC | P.C. MOUNTING

VS4 or VS5

DPDT

Option Code	Dim. 'A'
VS4	.460 (11.68)
VS5	.630 (16.00)

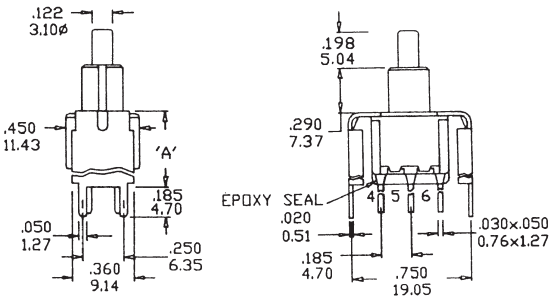

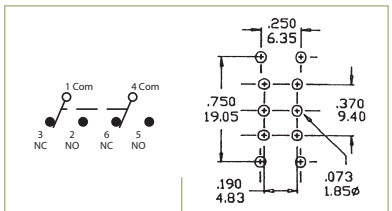

SCHEMATIC | P.C. MOUNTING

Downloaded from Datasheet.su

SERIES 700 SWITCHES

PUSHBUTTON SWITCHES - SNAP-ACTING PANEL MOUNTED

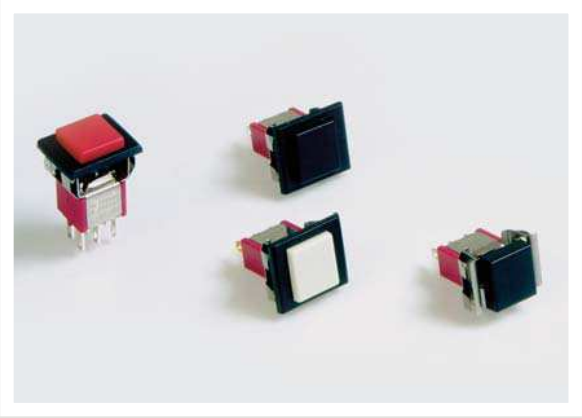

SPECIFICATIONS

Contact Rating:	1A @ 250 VDC 3A @ 120 VDC or 28VDC
Life Expectancy:	50,000 cycles typical
Contact Resistance:	10mΩ max., typical @ 2-4 VDC, 100mA for both silver and gold plated contacts
Insulation Resistance:	1,000 MΩ min.
Dielectric Strength:	1,000 V rms at sea level
Actuation Force:	200 ± 50 gf
Operating Temperature:	-30°C to +85°C

MATERIALS

Case:	Diallyl Phthalate (DAP)
Plunger:	Glass filled nylon or glass filled polyester
Bushing:	Nickel plated brass
Housing:	Stainless steel
Contacts:	Silver or Gold plated copper alloy

FEATURES & BENEFITS

- Snap acting contact design
- Gold & silver contact options
- Multiple termination options
- Snap-in panel mount option

APPLICATIONS/MARKETS

- Telecommunications
- Networking
- Computers/servers
- Performance audio
- Instrumentation
- Low power on/off designs
- External hard drives and modems

HOW TO ORDER

SERIES	MODEL NO.	TERMINATION	CONTACT MATERIAL	SEAL	CAP/FRAME	CAP COLOR	FRAME COLOR
700	SP7 DP7	M1 M3	Q = Silver R = Gold	E = Epoxy Sealed at Base of Terminal	AP1 AP2	BLK = Black RED = Red GRY = Grey WHT= White	BLK = Black RED = Red GRY = Grey WHT= White

Example Ordering Number

700–DP7–M1–Q–E–AP1–RED–RED

Specifications subject to change without notice.

AP1

CAP/FRAME SPDT

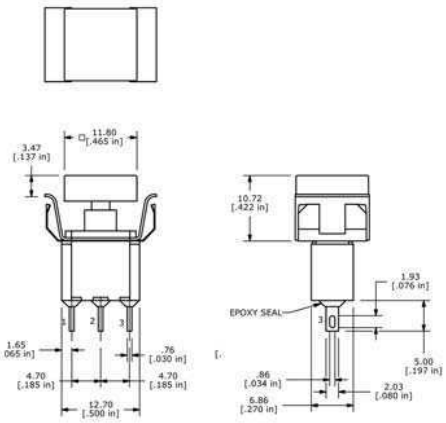

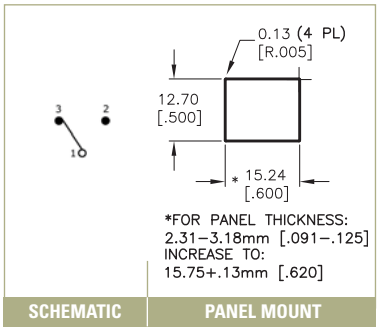

E•SWITCH®
Phone: 800-867-2717
Fax: 763-531-8235

Downloaded from Datasheet.su

AP2

CAP/FRAME SPDT

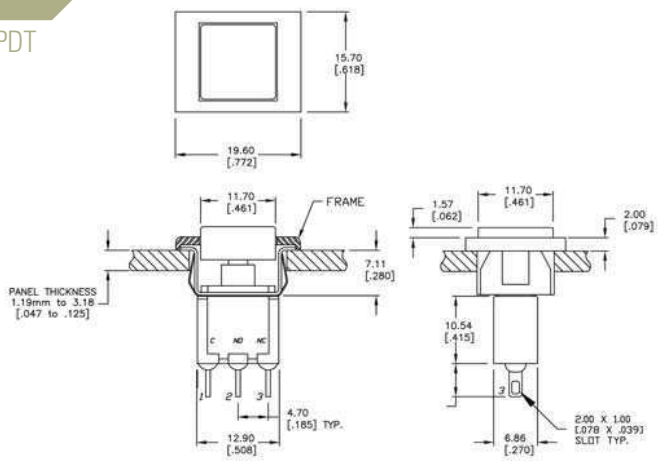

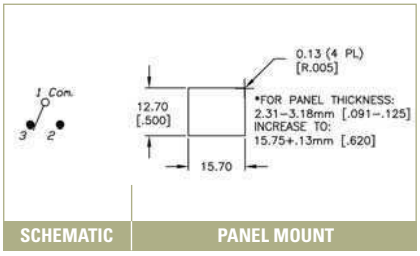

SCHEMATIC | PANEL MOUNT

AP2

CAP/FRAME DPDT

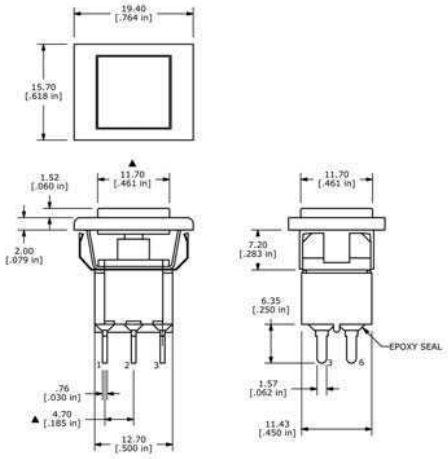

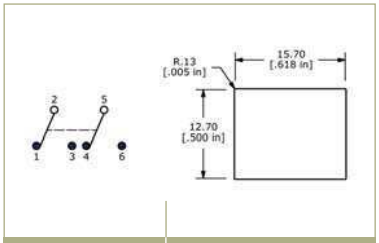

SCHEMATIC | PANEL MOUNT

TERMINATION OPTIONS FOR PANEL MOUNT

M1 SOLDER LUG

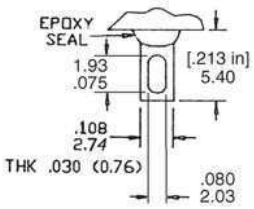

M3 QUICK CONNECT

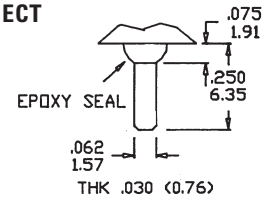

CONTACT MATERIAL OPTIONS

Q

Fixed Terminal:	Silver plated copper alloy
Moving Contact:	Silver plated copper alloy
Rating:	1 AMP @ 250 VAC 3 AMP @ 125 VAC or 28 VDC

R

Fixed Terminal:	Copper alloy with gold plate over nickel plate
Moving Contact:	Copper alloy with gold plate over nickel plate
Rating:	0.4 VA max. @ 20 VAC

Downloaded from Datasheet.su