Melody sound source LSI for cellular phone
BU8709KN

● Description

BU8709KN is a melody sound source LSI for cellular phones. This LSI generates 64 high quality polyphonic tones through high sampling rate (fs=44.1KHz).
1 ADPCM encoder and 2 ADPCM decoders functions are embedded, providing mixing capabilities. It can customize output sounds by an equalizer function and display the signals by Graphic Equalizer. It also has Reverb function, as well as LED & Vib synchronization.

● Dimension (Unit : mm)

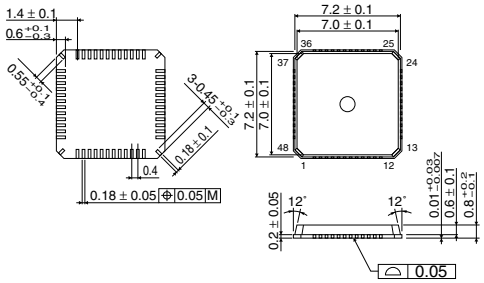

QFN48U

● Features

1) Simultaneous generation of up to 64 polyphonic tones out of a tone palette of 222 sounds
2) High-quality tone reproduction using Fs=44.1kHz, two-voice method
3) 12bit pitch bending and modulation support
4) Stereo and monaural modes
5) Built-in equalizer (3 channels) and vibration function
6) Built-in LED (3 channels)
7) Built-in reverb function
8) Plays up to four songs simultaneously
9) Built-in ADPCM encoder (1 channel) and decoder (2 channel), enables mixing with melody
10) Select among μ-law, A-law, and linear input for encoder
11) Control from CPU using serial or parallel interface
12) Built-in FIFO for sound source and ADPCM to reduce CPU's processing load
13) Built-in graphic equalizer (7-band)
14) Supports digital output (standard format or IIS format)
15) Provides 1-Poly mode for low power consumption

● Applications

Sound source for cellular phones and portable appliances

● Absolute Maximum Ratings (Ta=25˚C)

Parameter	Symbol	Limits	Unit	Conditions
Max. I/O supply voltage	VDDIO	–0.3 ~ 4.5	V	DVDD_IO, AVDD
Max. CORE supply voltage	VDDCO	–0.3 ~ 3.5	V	DVDD_CORE
Voltage applied to pin	VIN	DVSS–0.3 ~ VDDIO+3.5	V	
Input current	IIN	–1 ~ +1	μA	
Power dissipation	Pd	500	mW	Warranty setting of single IC
Storage temperature range	Tstg	–50 ~ 125	˚C	
Operating temperature range	Topr	–30 ~ 85	˚C	

∗Derating : 5.0mW/˚C for operation above Ta=25˚C

February, 2003

Downloaded from Datasheet.su

●Recommended Operating Conditions (Ta=25˚C)

Parameter	Symbol	Min.	Typ.	Max.	Unit	Conditions
I/O power supply voltage	VDDIO	2.7	3.0	3.3	V	DVDD_IO, AVDD
CORE power supply voltage	VDDCO	2.25	2.5	2.75	V	DVDD_CORE
Ambient temperature	Ta	–30	25	85	˚C	
MCLK input frequency	FMCLK	2.688	—	20	MHz	
SCLK input frequency	FSCLK	—	—	20	MHz	Scale precision is approximately 0.2%.
MCLK duty	DMCLK	40	50	60	%	
Analog pin's load resistance	ZAN	10	—	—	kΩ	After DC Coupling

●Electrical characteristics (Unless otherwise noted, Ta=25˚C)

Parameter	Symbol	Min.	Typ.	Max.	Unit	Conditions
<Digital DC characteristics>						
High-level input voltage	VIH	DVDD_IO-0.5	—	—	V	
Low-level input voltage	VIL	—	—	DVSS+0.5	V	
High-level input current	IIH	—	—	1	µA	VIH=VDDIO
Low-level input current	IIL	–1	—	—	µA	VIL=DVSS
High-level output voltage	VOH	DVDD_IO-0.3	—	—	V	IOH=–0.8mA
Low-level output voltage	VOL	—	—	DVSS+0.3	V	IOH=0.8mA
<Analog DC characteristics>						
VREF pin voltage	VAGND	0.475AVDD	0.5AVDD	0.525AVDD	V	IOUT=0A (no load)
Analog pin voltage	VOUT	0.47AVDD	0.5AVDD	0.53AVDD	V	IOUT=0A (no load) Not playing
<General characteristics>						
VREF pin rise time	TRVR	—	15	25	mS	When CVREF=1µF, NRST=L→H
<Analog pin characteristics>						
Analog amplitude	VMAX	—	1.8	—	Vp-p	Theoretical value for dynamic range
Power consumption DVDD_CORE=2.5V, DVDD_IO=3.0V, AVDD=3.0V, internal operation frequency SYS_CLK=50MHz						
Analog Idd 1	AIDD1	—	1.5	2.5	mA	Playing
Digital Idd 10	DIDD10	—	28	35	mA	Not playing MIDI CLK control="101"
Digital Idd 11 (DVDD_CORE)	DIDD11	—	56	65	mA	Playing 64POLY
Digital Idd 12 (DVDD_IO)	DIDD12	—	0.4	1	mA	Playing
Analog Idd 2	AIDD2	—	—	1	µA	Standby mode
Digital Idd 20 (DVDD_CORE)	DIDD20	—	—	10	µA	Standby mode
Digital Idd 21 (DVDD_IO)	DIDD21	—	—	5	µA	Standby mode

● Block Diagram

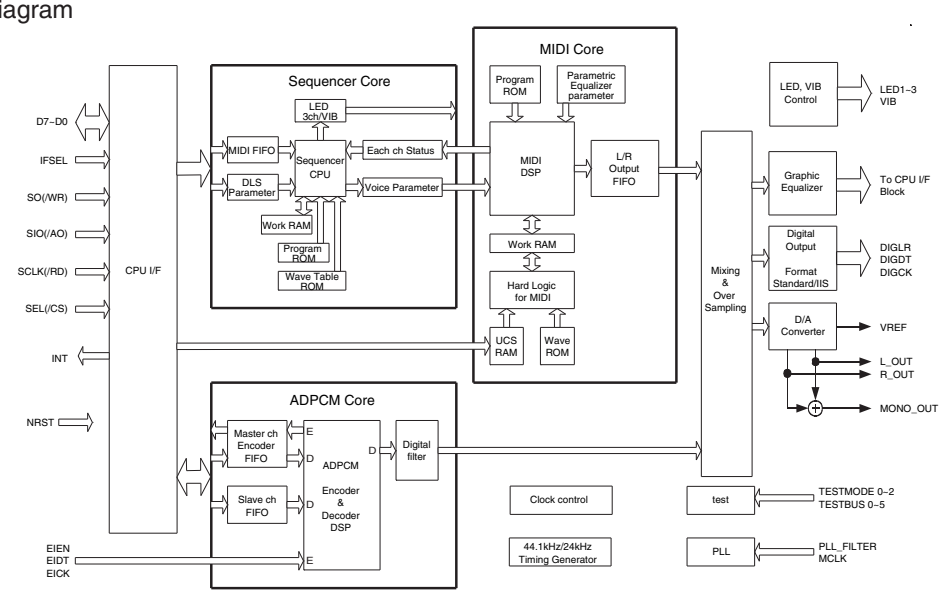

Downloaded from Datasheet.su