DC spark-over voltage [1) 2) 4)]	420 ± 20	V %
Impulse spark-over voltage [4)] at 100 V/µs - for 99 % of measured values - typical values of distribution at 1 kV/µs - for 99 % of measured values - typical values of distribution	 < 850 < 700 < 950 < 850	 V V V V
Nominal impulse discharge current (wave 8/20 µs) [5)] Single impulse discharge current (wave 8/20 µs) [5)]	10 15	kA kA
Nominal alternating discharge current (50 Hz, 1 s) [5)] Alternating discharge current (50 Hz, 9 cycles) [5)]	10 40	A A
Insulation resistance at 100 V_{dc} [4)]	> 10	GΩ
Capacitance at 1 MHz [4)]	< 1.5	pF
Transverse delay time [3)]	< 0.2	µs
Arc voltage at 1 A Glow to arc transition current Glow voltage	~ 30 ~ 1 ~ 200	V A V
Weight	~ 2.2	g
Storage temperature	-40 ... +90	℃
Climatic category (IEC 60068-1)	40/ 90/ 21	
Marking, red	**EPCOS** **420 YY M O** 420 - Nominal voltage YY - Year of production M - Month of production (1 ... 9 = Jan ... Sep O ... D = Oct ... Dec) O - Non radioactive	

1) At delivery AQL 0.65 level II, DIN ISO 2859
2) In ionized mode
3) Test according to ITU-T Rec. K.12
4) Tip or ring electrode to center electrode
5) Total current through center electrode, half value through tip respectively ring electrode.

Terms in accordance with ITU-T Rec. K.12 and DIN 57845/VDE0845

Downloaded from Datasheet.su

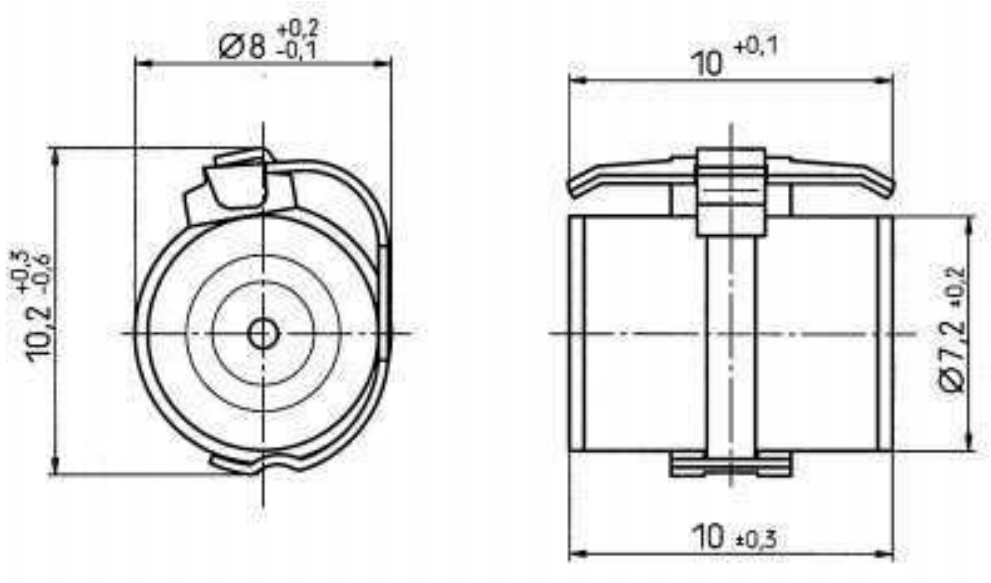

Not to scale

Dimensions in mm

Non controlled document

© EPCOS AG 2002. Reproduction, publication and dissemination of this data sheet, enclosures hereto and the information contained therein without EPCOS' prior express consent is prohibited.

Purchase orders are subject to the General Conditions for the Supply of Products and Services of the Electrical and Electronics Industry recommended by the ZVEI (German Electrical and Electronic Manufacturers' Association), unless otherwise agreed.

Downloaded from Datasheet.su