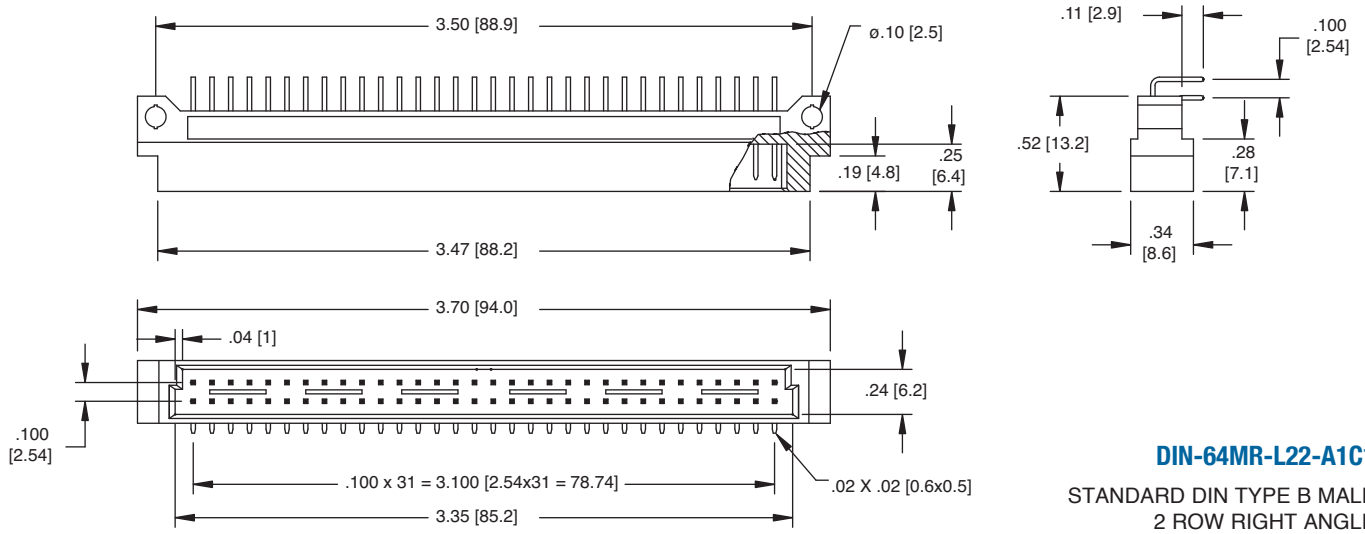


**DIN-64MR-L22-A1C1**

STANDARD DIN TYPE B MALE
2 ROW RIGHT ANGLE

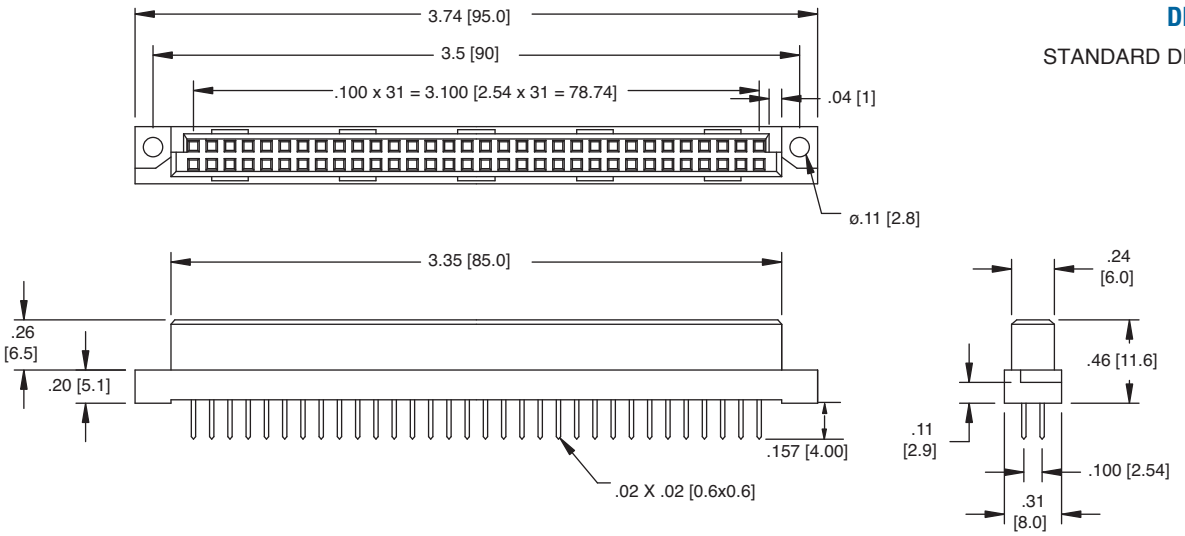


**DIN-64FS-L22-A1C1**

STANDARD DIN TYPE B FEMALE
2 ROW STRAIGHT

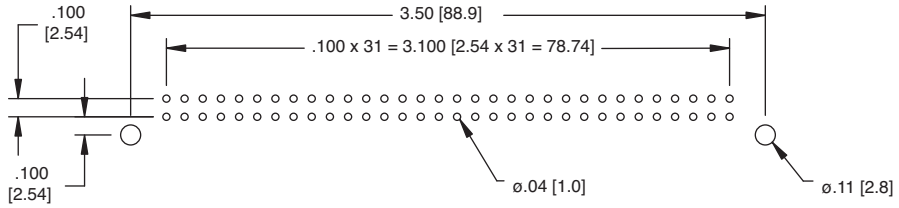


**Recommended PCB Layout - Male**

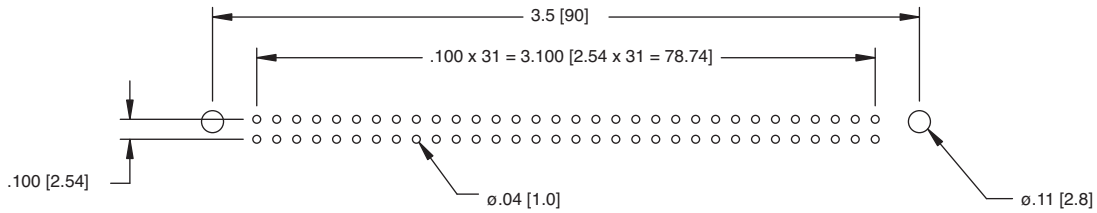


**Recommended PCB Layout - Female**



Downloaded from Datasheet.su