Tous droits strictement reserves. Reproduction ou communication a des tiers interdites sous quelque forme que ce soit sans autorisation ecrite du proprietaire. Propriete de c FCI. Droits de reproduction FCI.

All rights strictly reserved. Reproduction or issue to third parties in any form whatever is not permitted without written authority from the proprietor. Property of FCI. Copyright FCI.

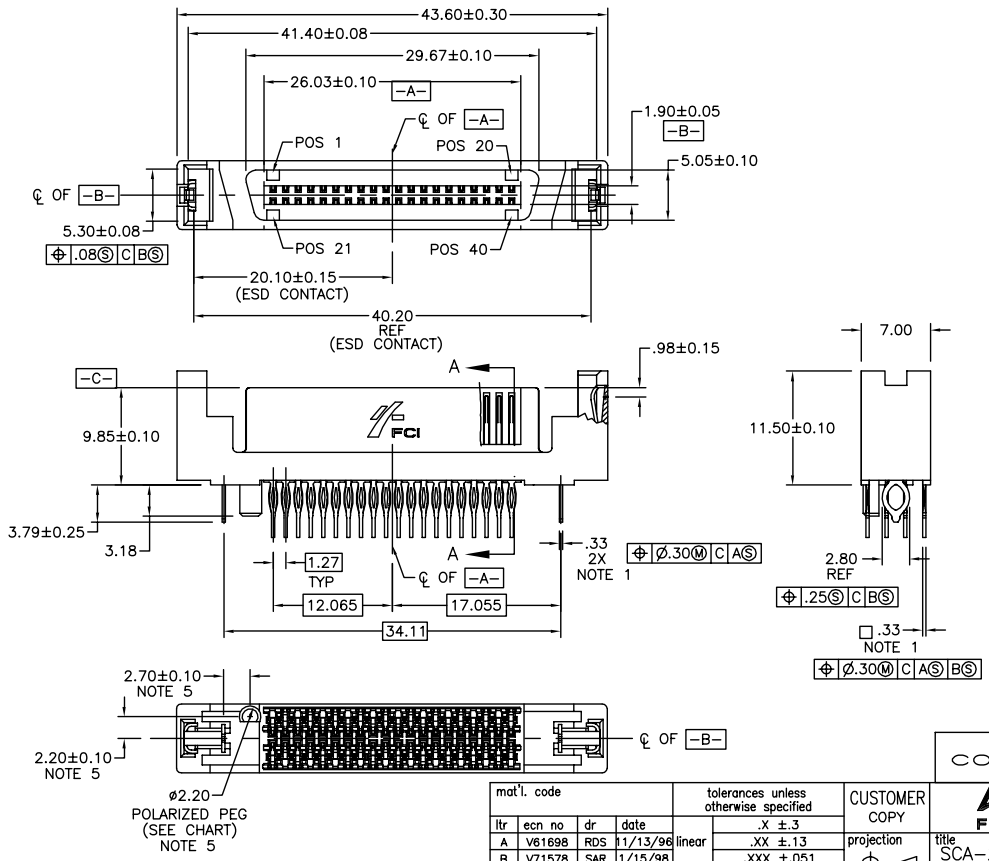

CONFIDENTIAL

mat'l. code				tolerances unless otherwise specified		
ltr	ecn no	dr	date		.X ±.3	
A	V61698	RDS	11/13/96	linear	.XX ±.13	
B	V71578	SAR	1/15/98		.XXX ±.051	
C	V00523	EPK	3/28/00	angles	0° ±2°	
D	V02706	LSS	10/23/00	dr	P. PARSONS	3/5/96
E	S05-0001	GLL	1/04/05	engr	J. DAVID	3/5/96
				chr	GL LOO	1/04/05
				appd	JOEY NG	1/04/05

sheet index	revision	E	E	E
	sheet	1	2	3

CUSTOMER COPY

projection

MM

scale 1:1

FCI www.fciconnect.com

title SCA-2 & FIBER CHANNEL 40 POS. RECEPT. ASS'Y

product family SCA-2

size A dwg no 87567

code –

sheet 1 of 3

cage code 22526

ACAD

PDM: Rev:E STATUS:Released Printed: Mar 11, 2011

Downloaded from Datasheet.su

Tous droits strictement reserves. Reproduction ou communication a des tiers interdite sous quelque forme que ce soit sans autorisation ecrite du proprietaire.
Propriete de c FCI. Droits de reproduction FCI.

All rights strictly reserved. Reproduction or issue to third parties in any form whatever is not permitted without written authority from the proprietor.
Property of FCI. Copyright FCI.

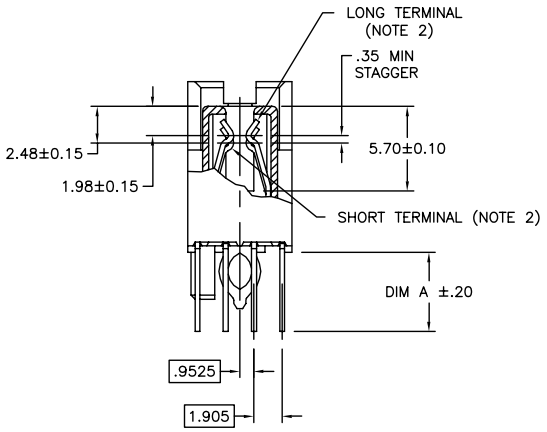

SECTION A–A

CONFIDENTIAL

mat'l. code				tolerances unless otherwise specified			CUSTOMER COPY	FCI www.fciconnect.com
ltr	ecn no	dr	date	linear	.X ±.3		projection	title SCA–2 & FIBER CHANNEL 40 POS. RECEPT. ASS'Y
E					.XX ±.13			
					.XXX ±.051			
				angles	0° ±2°			
				dr	P. PARSONS	3/5/96	MM	product family SCA–2 / code –
				engr	J. DAVID	3/5/96		size A / dwg no 87567
				chr	GL LOO	1/04/05	scale 2:1	sheet 2 of
				appd	JOEY NG	1/04/05		
sheet index	revision sheet							

cage code 22526

ACAD

PDM: Rev:E STATUS:Released Printed: Mar 11, 2011

Downloaded from Datasheet.su

PRODUCT NO.	"A" DIM	POLARIZATION PEG	PLATING	RECOMMENDED P.C. BOARD THICKNESS	PRODUCT NO.	PLATING	PRODUCT NO.	PLATING	PRODUCT NO.	PLATING
87567–001	3.79	YES	NOTE ④	2.36mm (0.093") AND 3.18mm (0.125")	87567–101	NOTE ⑥	87567–001LF	NOTE ⑧	87567–101LF	NOTE ⑦
–002	3.79	NO			–102		–002LF		–102LF	
–003	4.60	YES			–103		–003LF		–103LF	
87567–004	4.60	NO			87567–104		87567–004LF		87567–104LF	
					NOTE 6		NOTE 8		NOTE 7	

NOTES :

① TRUE POSITION NOTES APPLY AT TERMINAL TIP. ⌖ ø0.13 Ⓜ Y Ⓜ

② CONTACTS IN POSITIONS 1 THRU 20,24,25,27,28, 30, 31, 33, AND 34 ARE SHORT TERMINALS.
CONTACTS IN POSITIONS 21, 22, 23, 26, 29, 32, AND 35 THRU 40 ARE LONG TERMINALS.

③ RAW MATERIALS:
HOUSING: HTN, UL94V–0, COLOR: BLACK
CONTACTS: PHOSPHOR–BRONZE

④ CONTACT PLATING: 30u" (0.76um) MIN. GXT PLATING OVER 50u" (1.27um) NICKLE MIN. UNDERPLATE IN CONTACT AREA. 20μ" (0.5μm) MIN. 60μ" (1.5μm) MAX. TIN–LEAD PLATING OVER 50μ" (1.27μm) MIN. NICKLE UNDERPLATE IN P.C. BOARD LEG AREA. 50μ" (1.27μm) MIN. NICKLE UNDERPLATE OVER REMAINING AREA.

⑤ DIMENSIONS DO NOT APPLY TO CONNECTOR STYLES WITHOUT POLARIZATION PEG. (SEE CHART)

⑥ CONTACT PLATING: 30μ" (0.76um) MIN GOLD PLATING OVER 50μ" (1.27μm) NICKLE UNDERPLATE IN CONTACT AREA. 20μ" (0.5μm) MIN–60μ" (1.5μm) MAX TIN–LEAD PLATING OVER 50u" (1.27μm) MIN. NICKLE UNDERPLATE IN P.C. BOARD LEG AREA. 50u" (1.27μm) MIN. NICKLE UNDERPLATE OVER REMAINING AREA.

⑦ CONTACT PLATING: 30μ" (0.76μm) GOLD PLATING OVER 50μ" (1.27μm) NICKLE UNDERPLATE IN CONTACT AREA. 20μ" (0.5μm) – 60μ"(1.5μm) TIN PLATING OVER 50μ" (1.27μm) –100μ" (2.54μm) NICKEL UNDERPLATE IN P.C. BOARD LEG AREA. 50μ" (1.27μm) NICKEL UNDERPLATE OVER REMAINING AREA.

⑧ CONTACT PLATING: 30μ" (0.76μm) GXT PLATING OVER 50μ" (1.27μm) NICKLE UNDERPLATE IN CONTACT AREA. 20μ" (0.5μm) – 60μ"(1.5μm) TIN PLATING OVER 50μ" (1.27μm) –100μ" (2.54μm) NICKEL UNDERPLATE IN P.C. BOARD LEG AREA. 50μ" (1.27μm) NICKEL UNDERPLATE OVER REMAINING AREA.

⑨ THE HOUSING WILL WITHSTAND EXPOSURE TO 260°C PEAK TEMPERATURE FOR 10 SECONDS IN A CONVECTION, INFRA RED VAPOR PHASE REFLOW OVEN.

⑩ THIS PRODUCT MEETS EUROPEAN UNION DIRECTIVES AND OTHER COUNTRY REGULATIONS AS DESCRIBED IN GS–22–008.

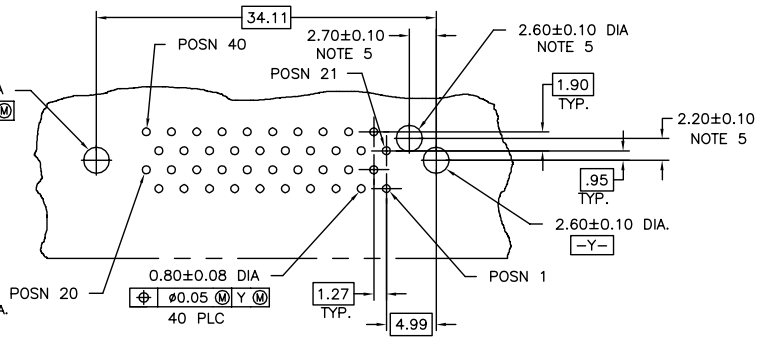

RECOMMENDED PC BOARD
MOUNTING DIMENSIONS
COMPONENT SIDE

CONFIDENTIAL

mat'l. code				tolerances unless otherwise specified		CUSTOMER COPY	FCI www.fciconnect.com	
ltr	ecn no	dr	date	linear	.X ±.3	projection	title SCA–2 & FIBER CHANNEL 40 POS. RECEPT. ASS'Y	
E					.XX ±.13			
					.XXX ±.051			
				angles	0° ±2°			
				dr	P. PARSONS 3/5/96	MM	product family SCA–2	code –
				engr	J. DAVID 3/5/96		size A dwg no 87567	sheet 3 of 3
				chr	GL LOO 1/04/05	scale 2:1		
				appd	JOEY NG 1/04/05			
sheet index	revision sheet						cage code 22526	

Tous droits strictement reservés. Reproduction ou communication a des tiers interdite sous quelque forme que ce soit sans autorisation ecrite du propietaire. Propriete de c FCI. Droits de reproduction FCI.

All rights strictly reserved. Reproduction or issue to third parties in any form whatsever is not permitted without written authority from the proprietor. Property of FCI. Copyright FCI.

ACAD

PDM: Rev:E STATUS:Released Printed: Mar 11, 2011

Downloaded from Datasheet.su