PRODUCT NO.	COVER	BUTTON COLOR	MOUNT STYLE	STAND OFF	APPLICABLE HDR P/N	PACKAGING SPEC	PRODUCT SPEC
62599-00R0	–	BLACK	ABOVE	0 mm	62596-00A	GS-14-655	110-415
-00L0	–						
-00R0C	WITH						
-00L0C	WITH						
-00R1C	WITH	BRIGHT WHITE					

REVISIONS				
REV	DESCRIPTION	ECN	BY	DATE
A	RELEASED	J00470	N.T	12/21/'99
B	REVISED	J00242	N.T	3/23/'00
C	REVISED	J00271	N.T	5/5/'00
D	REVISED	J10204	N.T	2/20/'01
E	REVISED	J10416	M.H	7/30/'01
F	REVISED	J20569	M.H	10/24/'02

注記

10。オプション（カバー）装着品。
9。本品はタイプ1，2カードに対応しています。
8。ピンヘッダへの組込はｂ部を水平になるように押さえ，
本品と確実かん合させてから，ｃ部をピンヘッダ上面まで押し込む。
7。基板実装時の寸法を表す。
6。推奨パターン寸法図はピンヘッダ製品図に示す。
5。基板への取付はM2×P0。4ネジ及び座金を各4個使用する。
4。取付ネジ長さは使用する基板厚と＊寸法を確認の上選定のこと。
3。最大ネジ締め締付トルク：0。245N・m（2。5kgf・cm）。
2。本品はピンヘッダーと合わせて使用する。
1。ボタンの色調は表参照のこと。

NOTE

10. OPTION (COVER) IS ATTACHED.
9. PC CARD TYPE 1, 2 APPLICABLE.
8. AS MOUNTING METHOD TO PIN-HEADER,
IT SHALL BE PUT MARKED PORTION B HORIZONTALLY AND BE FITTED ON CONPLETELY.
THEN IT SHALL BE PUSHED MARKED PORTION C BY TOP SURFACE OF THE PIN-HEADER.
7. SHOW P.C.BOARD MOUNTING DIMENSIONS.
6. SEE PIN-HEADER PRODUCT DRAWING FOR RECOMMENDED PATTERN DIMENSIONS.
5. 4-M2xP0.4 SCREW WITH WASHER ARE REQUIRED FOR FASTENING CONNECTOR TO P.C.BOARD.
4. DETERMINE MOUNTING SCREW LENGTH UPON CHECKING P.C.BOARD THICKNESS AND "*" DIMENSION.
("*" SHOWS REQUIRED SCREW LENGTH FROM MOUNTING SURFACE.)
3. MAXIMUM TIGHTENING TORQUE:0.245N·m(2.5kgf·cm).
2. THIS PRODUCT USED WITH PIN-HEADER.
1. BUTTON COLOR : REFER TO TABLE.

NO	DESCRIPTION	QTY	MATERIAL	FINISH	REMARKS
⑥	COVER	1	STAINLESS STEEL		
⑤	SPECIAL SPACER	2	ZINC ALLOY		
④	SPACER	2	STEEL	ZINC PLATING	
③	SHROUD	1	COPPER ALLOY	CONTACT AREA : GOLD OVER NICKEL	
②	BUTTON	1	ABS		UL94HB
①	CASE	2	STAINLESS STEEL		

SHEET INDEX	ISSUE	F	D	D	D	D	B
	SH NO.	1	2	3	4	5	6

TOLERANCES UNLESS OTHERWISE SPECIFIED
LINEAR
ANGLES
MAT: SEE NOTE
FINISH
DR: M. Hasegawa DATE 10/24/'02
ENGR: M. Hasegawa 10/24/'02
CHK: 11/8/'02
APPD: 11/29/'02
CUSTOMER COPY
THIRD ANGLE PROJ
UNIT MM INCHES
TITLE: S/D SMTIL CARDBUS EJECT MECH. 2-STEP ABOVE MOUNT
PRODUCT FAMILY: Header CB SMT IL
CODE: JP
SCALE 2/1 | SIZE C | DWG. NO. 62599 | REV F | SHEET 1 OF 6

DF-003A REV F
DO NOT SCALE PRINT THIS INFORMATION IS CONFIDENTIAL AND IS DISCLOSED TO YOU ON CONDITION THAT NO FURTHER DISCLOSURE IS MADE BY YOU TO OTHER THAN FCI PERSONNEL WITHOUT WRITTEN AUTHORIZATION FROM FCI JAPAN K.K.

Downloaded from Datasheet.su

PRODUCT NO.
62599-00R0

REVISIONS				
REV	DESCRIPTION	ECN	BY	DATE
A	RELEASED	J90470	N.T	12/21/99
B	REVISED	J00242	N.T	3/23/00
C	REVISED	J00271	N.T	6/5/00
D	REVISED	J20569	N.T	10/24/02

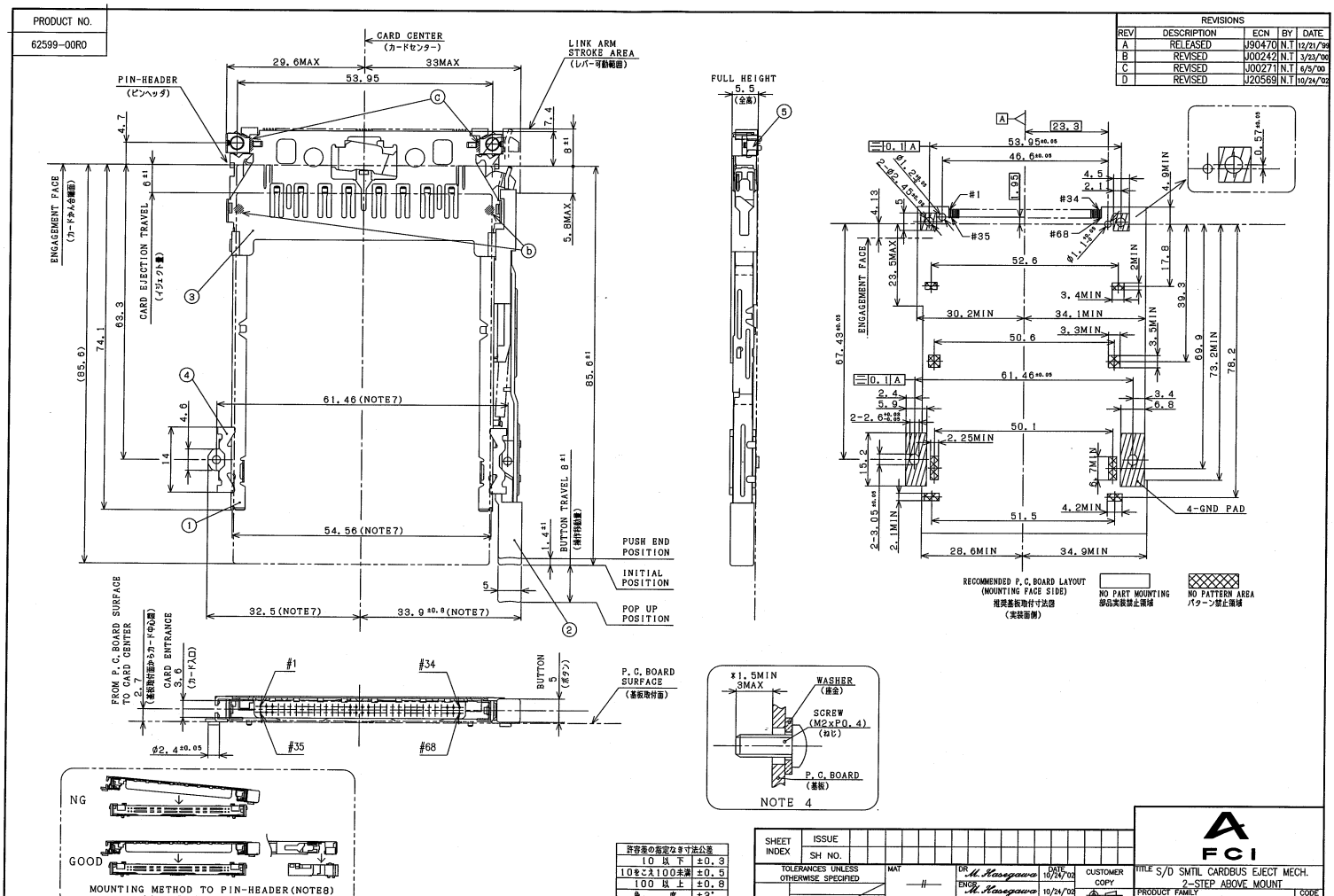

許容差の指定なき寸法公差	
10 以 下	±0.3
10をこえ100未満	±0.5
100 以 上	±0.8
角 度	±3°

SHEET INDEX	ISSUE				
	SH NO.				
TOLERANCES UNLESS OTHERWISE SPECIFIED	MAT	DR M. Hasegawa	DATE 10/24/02	CUSTOMER COPY	TITLE S/D SMTIL CARDBUS EJECT MECH. 2-STEP ABOVE MOUNT
LINEAR	FINISH	ENGR M. Hasegawa	10/24/02	THIRD ANGLE PROJ	PRODUCT FAMILY Header CB SMT IL / CODE JP
ANGLES		CHK		UNIT MM	SCALE — / SIZE C / DWG. NO. 62599 / REV D / SHEET 2 OF
		APPD			

DF-003A REV F

DO NOT SCALE PRINT THIS INFORMATION IS CONFIDENTIAL AND IS DISCLOSED TO YOU ON CONDITION THAT NO FURTHER DISCLOSURE IS MADE BY YOU TO OTHER THAN FCI PERSONNEL WITHOUT WRITTEN AUTHORIZATION FROM FCI JAPAN K.K.

PDM: Rev:F STATUS:Released Printed: Feb 10, 2006

Downloaded from Datasheet.su

PRODUCT NO.

62599-00L0

REVISIONS				
REV	DESCRIPTION	ECN	BY	DATE
A	RELEASED	J90470	N.T	12/21/99
B	REVISED	J00242	N.T	3/23/00
C	REVISED	J00271	N.T	6/5/00
D	REVISED	J20569	M.H	10/24/02

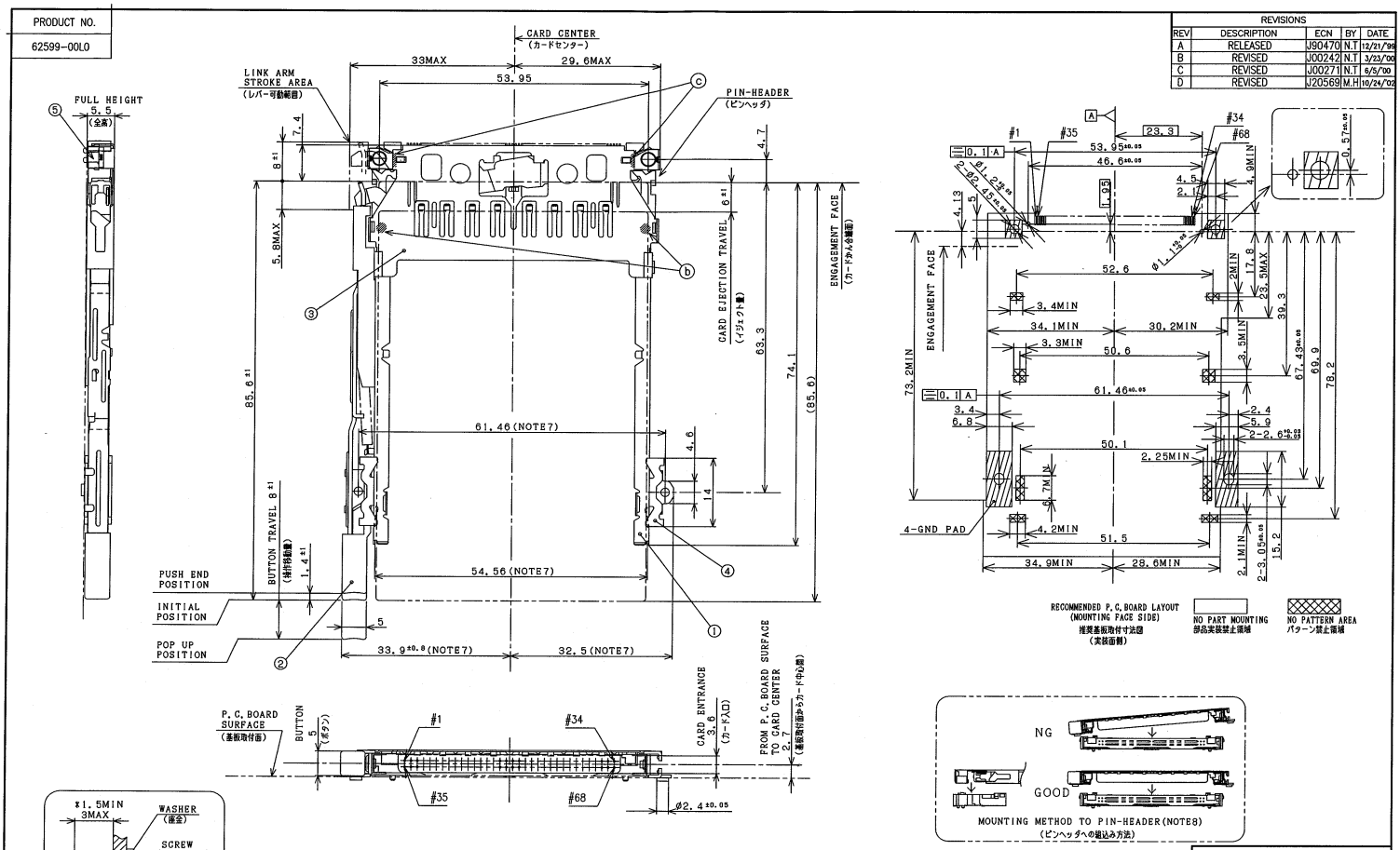

許容差の指定なき寸法公差	
10 以 下	±0.3
10をこえ100未満	±0.5
100 以 上	±0.8
角 度	±3°

SHEET INDEX	ISSUE	
	SH NO.	

TOLERANCES UNLESS OTHERWISE SPECIFIED
LINEAR
ANGLES
MAT
FINISH

DR	M. Hasegawa	DATE 10/24/02
ENGR	M. Hasegawa	10/24/02
CHK		
APPD		

CUSTOMER COPY
THIRD ANGLE PROJ.
UNIT MM INCHES

FCI

TITLE S/D SMTIL CARDBUS EJECT MECH. 2-STEP ABOVE MOUNT

PRODUCT FAMILY Header CB SMT IL

CODE JP

SCALE	SIZE	DWG. NO.	REV	SHEET
—	C	62599	D	3 OF

DF-003A REV F

DO NOT SCALE PRINT THIS INFORMATION IS CONFIDENTIAL AND IS DISCLOSED TO YOU ON CONDITION THAT NO FURTHER DISCLOSURE IS MADE BY YOU TO OTHER THAN FCI PERSONNEL WITHOUT WRITTEN AUTHORIZATION FROM FCI JAPAN K.K.

PDM: Rev:F STATUS:Released Printed: Feb 10, 2006

Downloaded from Datasheet.su

PRODUCT NO.
62599-00R0C

REVISIONS				
REV	DESCRIPTION	ECN	BY	DATE
A	RELEASED	J90470	N.T	12/21/99
B	REVISED	J00242	N.T	3/23/00
C	REVISED	J00271	N.T	6/5/00
D	REVISED	J20569	M.H	10/24/02

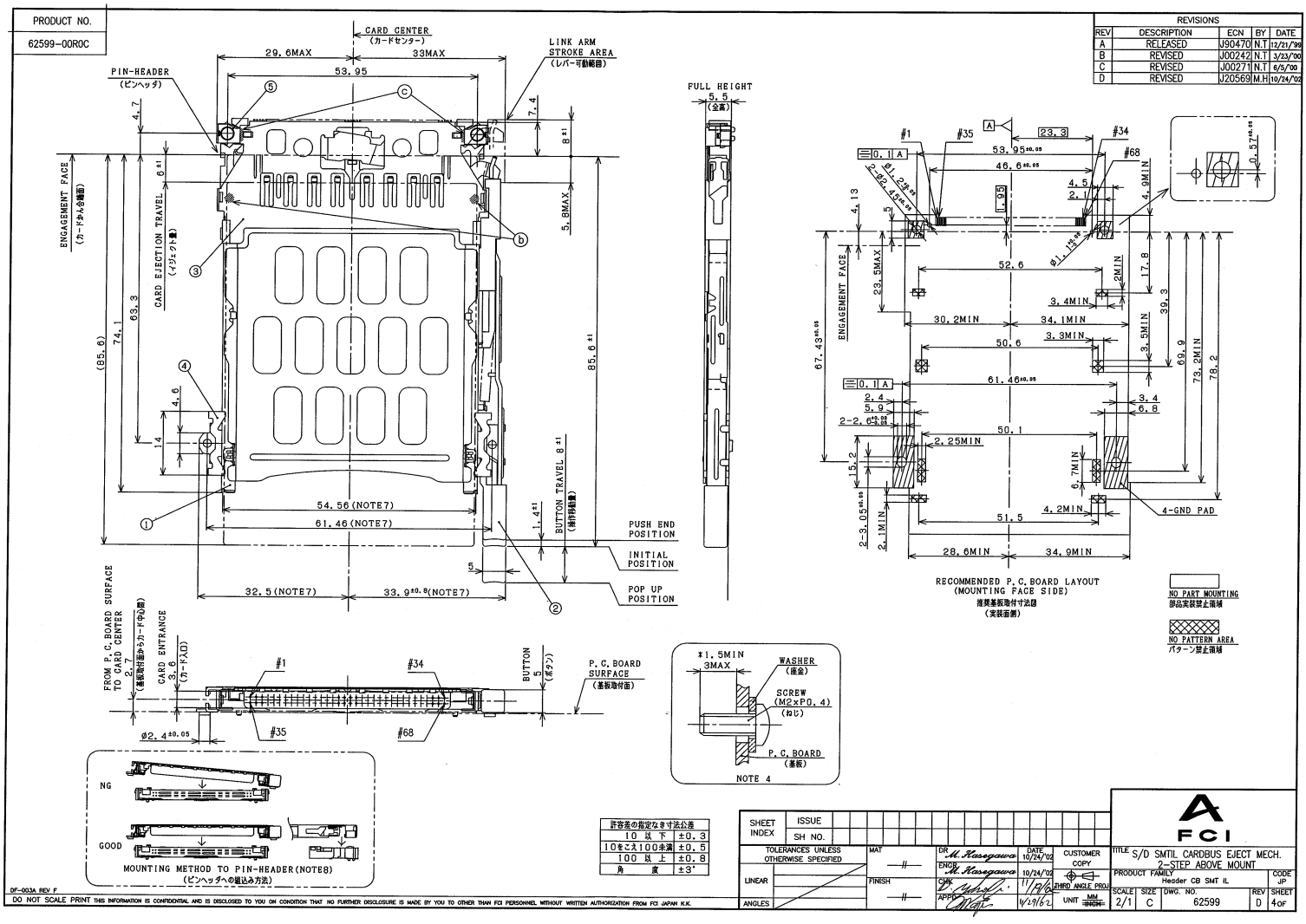

許容差の指定なき寸法公差	
10 以下	±0.3
10をこえ100未満	±0.5
100 以上	±0.8
角 度	±3°

SHEET INDEX	ISSUE	
	SH NO.	

TOLERANCES UNLESS OTHERWISE SPECIFIED	MAT	DR M.Hasegawa	DATE 10/24/02	CUSTOMER COPY	TITLE S/D SMTIL CARDBUS EJECT MECH. 2-STEP ABOVE MOUNT
LINEAR	FINISH	ENGR M.Hasegawa	10/24/02	2HRD ANGLE PROJ	PRODUCT FAMILY Header CB SMT IL
ANGLES		CHK D.Yoshi	11/19/02	UNIT MM INCHES	CODE JP
		APPD	11/29/02		SCALE 2/1 · SIZE C · DWG. NO. 62599 · REV D · SHEET 4 OF

FCI

DF-003A REV F

DO NOT SCALE PRINT THIS INFORMATION IS CONFIDENTIAL AND IS DISCLOSED TO YOU ON CONDITION THAT NO FURTHER DISCLOSURE IS MADE BY YOU TO OTHER THAN FCI PERSONNEL WITHOUT WRITTEN AUTHORIZATION FROM FCI JAPAN K.K.

PDM: Rev:F STATUS:Released Printed: Feb 10, 2006

Downloaded from Datasheet.su

PRODUCT NO.

62599-00L0C

REVISIONS				
REV	DESCRIPTION	ECN	BY	DATE
A	RELEASED	J90470	N.T	12/21/'99
B	REVISED	J00242	N.T	3/23/'00
C	REVISED	J00271	N.T	6/5/'00
D	REVISED	J20569	M.H	10/24/'02

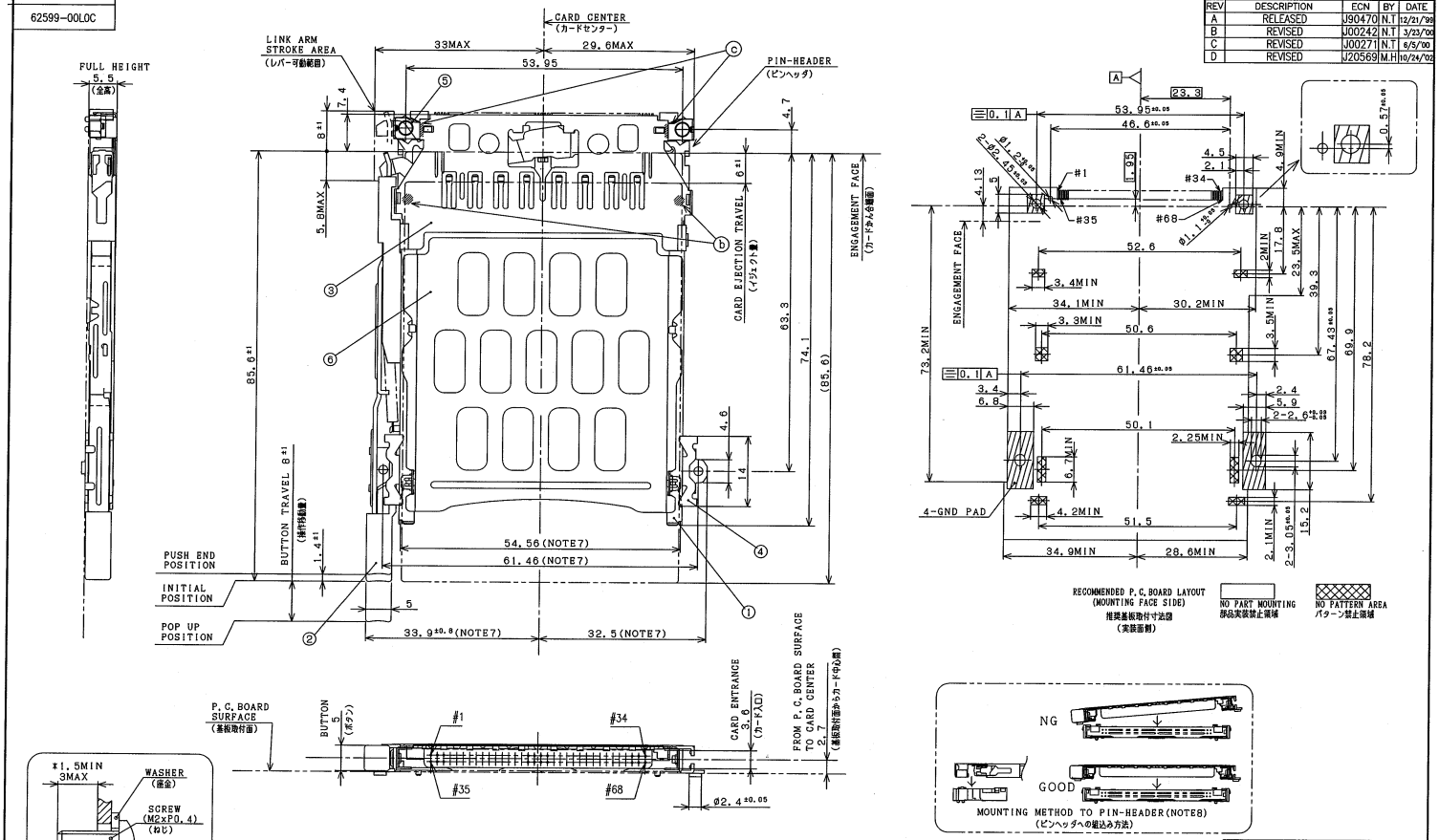

許容差の指定なきすき法公差	
10 以 下	±0.3
10をこえ100未満	±0.5
100 以 上	±0.8
角 度	±3'

SHEET INDEX	ISSUE										
	SH NO.										

TOLERANCES UNLESS OTHERWISE SPECIFIED	MAT	DR M.Hasegawa	DATE 10/24/'02	CUSTOMER COPY	TITLE S/D SMTIL CARDBUS MECH. 2-STEP ABOVE MOUNT	
LINEAR	FINISH	ENGR M.Hasegawa	10/24/'02	THIRD ANGLE PROJ	PRODUCT FAMILY Header CB SMT IL	CODE JP
ANGLES		CHK D.Nichols	11/1/'02	UNIT MM	SCALE — / SIZE C / DWG. NO. 62599	REV D / SHEET 5 OF

FCI

DF-003A REV F

DO NOT SCALE PRINT THIS INFORMATION IS CONFIDENTIAL AND IS DISCLOSED TO YOU ON CONDITION THAT NO FURTHER DISCLOSURE IS MADE BY YOU TO OTHER THAN FCI PERSONNEL WITHOUT WRITTEN AUTHORIZATION FROM FCI JAPAN K.K.

PDM: Rev:F STATUS:Released Printed: Feb 10, 2006

Downloaded from Datasheet.su

PRODUCT NO.
62599-00R1C

REVISIONS

REV	DESCRIPTION	ECN	BY	DATE
A	RELEASED	J00271	N.T	6/5/'00
B	REVISED	J20569	M.H	10/24/'02

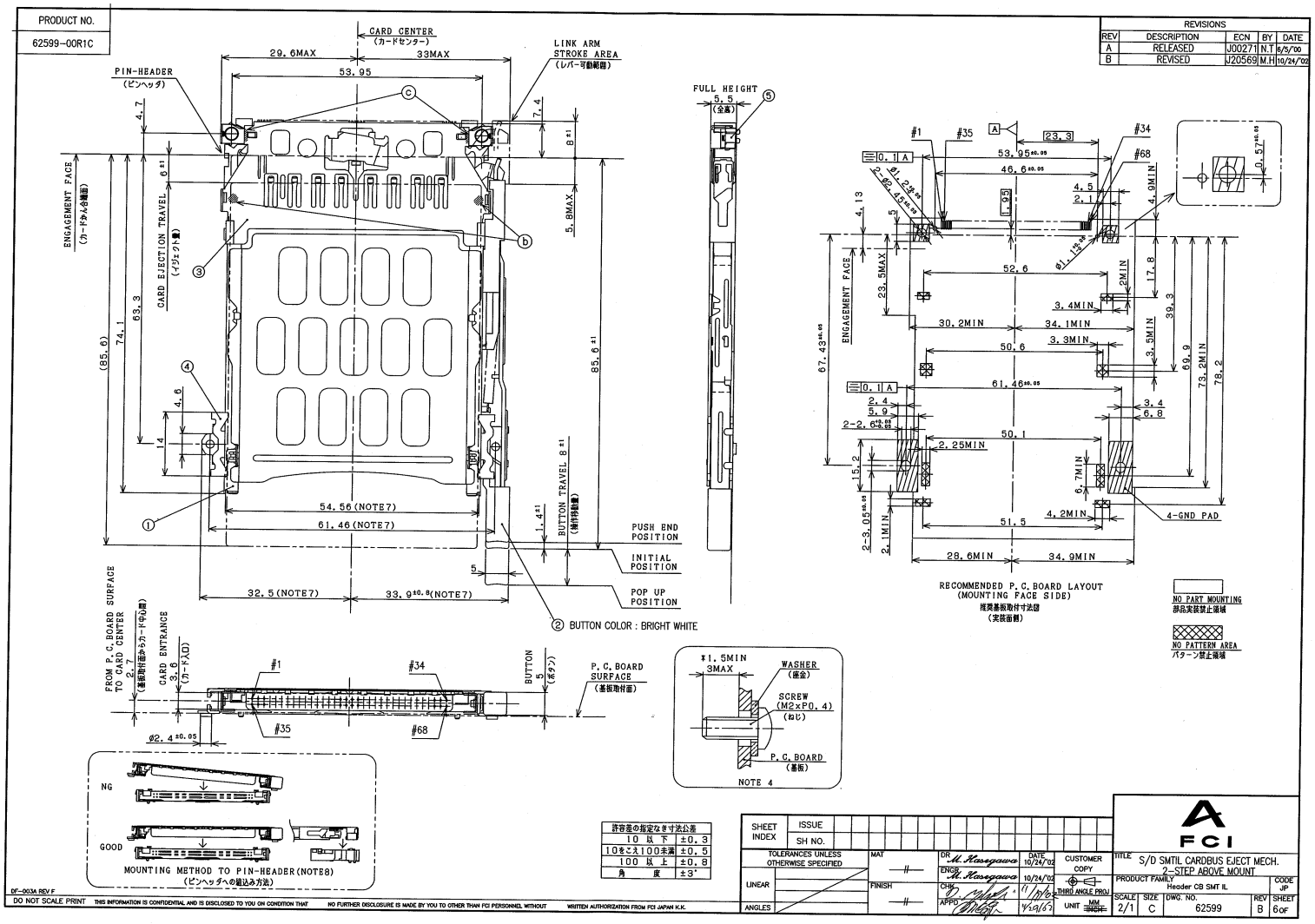

許容差の指定なき寸法公差	
10 以下	±0.3
10をこえ100未満	±0.5
100 以上	±0.8
角度	±3°

DF-003A REV F

DO NOT SCALE PRINT

THIS INFORMATION IS CONFIDENTIAL AND IS DISCLOSED TO YOU ON CONDITION THAT NO FURTHER DISCLOSURE IS MADE BY YOU TO OTHER THAN FCI PERSONNEL WITHOUT WRITTEN AUTHORIZATION FROM FCI JAPAN K.K.

SHEET INDEX | ISSUE | SH NO.

TOLERANCES UNLESS OTHERWISE SPECIFIED: LINEAR, ANGLES

MAT | FINISH

DR M. Hasegawa 10/24/'02
ENGR M. Hasegawa 10/24/'02
CHK 10/24/'02
APPD 11/29/'02

CUSTOMER COPY | THIRD ANGLE PROJ | UNIT MM

FCI

TITLE: S/D SMTIL CARDBUS EJECT MECH. 2-STEP ABOVE MOUNT

PRODUCT FAMILY: Header CB SMT IL | CODE: JP

SCALE	SIZE	DWG. NO.	REV	SHEET
2/1	C	62599	B	6 OF

PDM: Rev:F STATUS:Released Printed: Feb 10, 2006

Downloaded from Datasheet.su