PRODUCT NO.	DIM "A"	PCB THICKNESS
62525-101	2.8	1.6mm
-101LF		
62525-102	3.8	2.4mm
-102LF		
62525-103	4.5	3.2mm
-103LF		

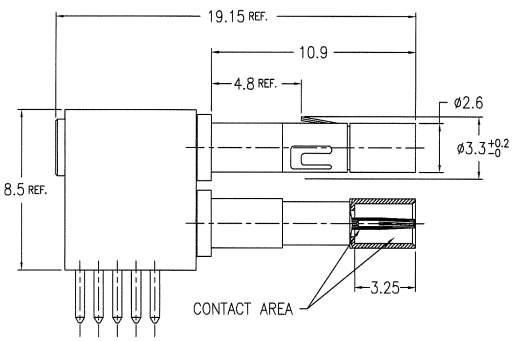

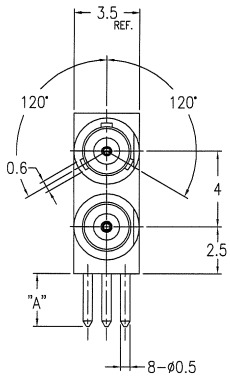

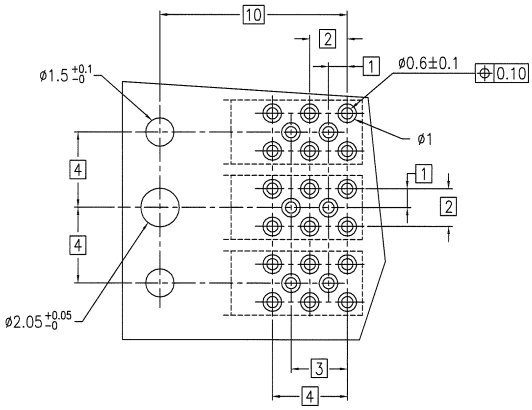

PC BOARD LAYOUT

NOTES

1. MATERIAL : CONTACT AREA BeCu
   SPRING CLIP BeCu
   INSULATOTR PTFE
   OTHERS BRASS
2. PLATING : CONTACT AREA Au 0.8um MIN. UNDER Ni 1.27um MIN.
   SPRING CLIP Ni 1.27um MIN.
   BODY Ni 1.27um MIN.
   INSERT CAP Ni 1.27um MIN.
   OTHERS Au FLASH UNDER Ni 1.27um MIN.
3. FOR LEAD FREE P/N, THE PRODUCT MEET EUROPEAN UNION DIRECTIVES AND OTHER COUNTRY REGULATIONS AS DESCRIBED IN GS-22-008
4. THE HOUSING WILL WITHSTAND EXPOSURE TO 260℃ PEAK TEMPERATURE FOR 10 SECONDS IN A CONVECTION, INFRA-RED OR VAPOR PHASE REFLOW OVEN.

ltr	description	ecn no	dr	date
A	RELEASED	J90148	Y.K	5/10/'99
B	REVISED	J90200	Y.K	6/7/'99
C	REVISED	J20641	Y.K	12/16/'02
D	REVISED	J05-0673	Y.K	10/21/'05
E	REVISED	J07-0030	S.O	1/18/'07

mat'l. code ---

surface ISO 1302 ✓ tolerance ISO 406 ISO 1101

tolerances unless otherwise specified: angles 0°±2°; linear 0.X ±0.3, 0.XX ±0.3, 0.XXX ±0.3

projection MM

scale 5:1

dr	Y.KODAIRA	5/10/'99
engr	S.OKUDAIRA	1/18/'07
chr	R. Shoji	1/18/07
appd	S. Okudaira	1/18/07

product family METRAL CODE JP

title METRAL MINI COAX RECE. R/A ASS'Y

dwg no 62525 sheet 1 of 1 size A3

type Customer Drawing

sheet index revision E sheet 1 Rev. E

form: A3

PDM: Rev:E STATUS:Released Printed: Jun 07, 2024

FCIconnect.com
Copyright FCI.

Downloaded from Datasheet.su