SHEET OF

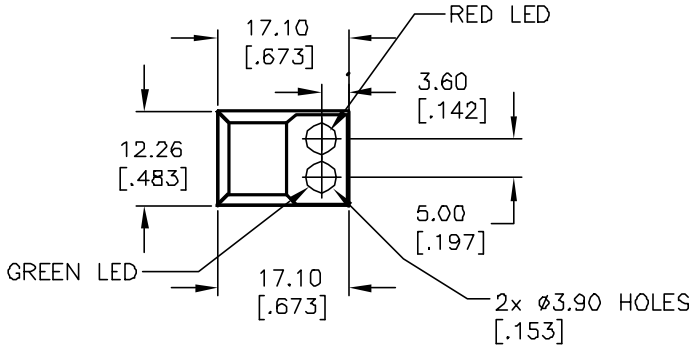

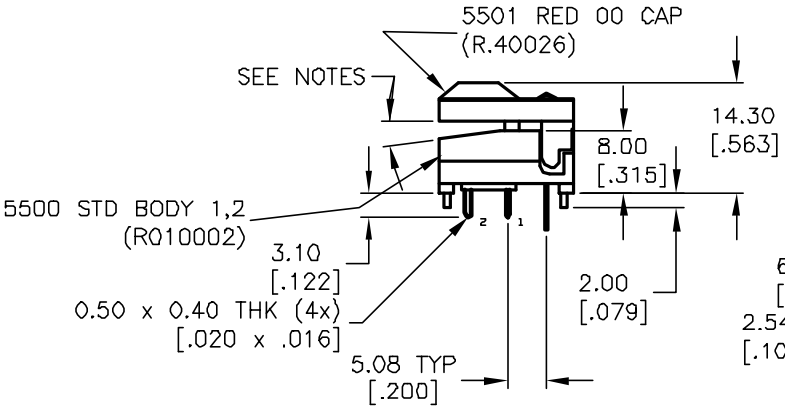

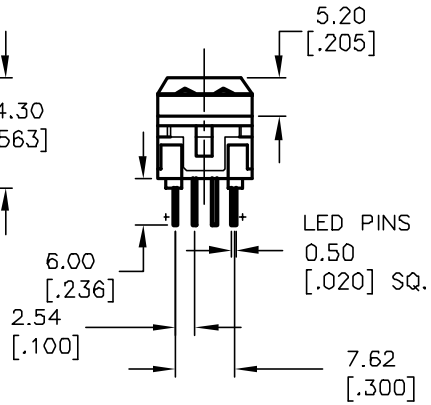

RED LED

PARAMETERS	SYMBOL	MAX.	MIN.	TYP.	UNITS
POWER DISSIPATION	P_D	80	--		mW
AVE FORWARD CURRENT	I_{AF}	30	--		mA
PEAK FORWARD CURRENT	I_{PF}	80	--		mA
FORWARD VOLTAGE	V_F	2.8	1.8	2.2	V
REVERSE VOLTAGE	V_R	5	--		V
REVERSE CURRENT	I_R	100	--		μA
EMISSION WAVELENGTH	λ_P			695	nm
LUMINOUS INTENSITY	I_F		0.7	2.2	mcd

GREEN LED

PARAMETERS	SYMBOL	MAX.	MIN.	TYP.	UNITS
POWER DISSIPATION	P_D	100	--		mW
AVE FORWARD CURRENT	I_{AF}	30	--		mA
PEAK FORWARD CURRENT	I_{PF}	120	--		mA
FORWARD VOLTAGE	V_F	2.8	1.9	2.2	V
REVERSE VOLTAGE	V_R	5	--		V
REVERSE CURRENT	I_R	100	--		μA
EMISSION WAVELENGTH	λ_P			570	nm
LUMINOUS INTENSITY	I_F		6.0	15.0	mcd

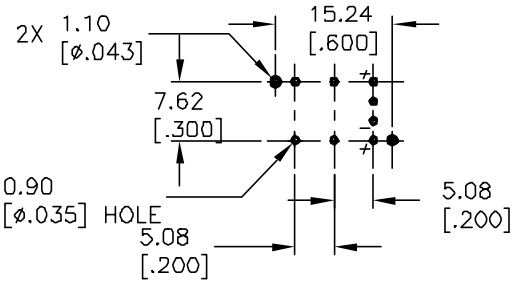

RECOMMENDED P.C.B LAYOUT

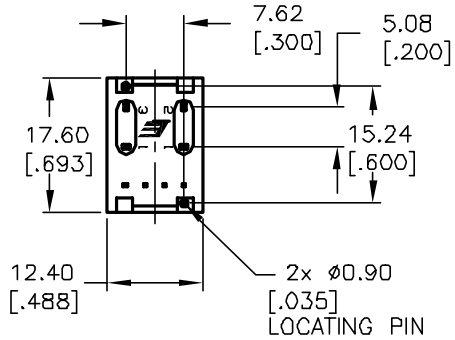

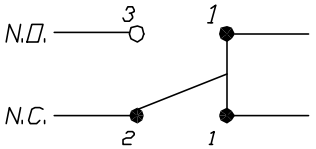

CIRCUIT: SPDT
CONTACT CONFIGURATION

NOTES:

1. ALL DIMENSIONS IN MM [INCH]
2. GENERAL TOLERANCE: X.X=±0.4
   X.XX=±0.25
3. TERM. NOS. FOR REFERENCE ONLY
4. RATINGS: 12mA @24V
5. ▲ CONTACT FIXED AND MOVING:
   COPPER ALLOY W/ GOLD PLATE
6. CONTINUOUS CURRENT RATING: 120mA
7. POWER RATING: 240mW
8. OPERATING FORCE: <200gf
9. OPERATING TRAVEL: 2.5±0.2mm

REV.	ECN No.	DESCRIPTION	DATE	CHKD
A	11318	RELEASED FOR PRODUCTION	10/16/01	CJC

THE INFORMATION CONTAINED IN THIS DOCUMENT IS PROPRIETARY TO E-SWITCH AND IS NOT TO BE COPIED OR TRANSFERRED

E-SWITCH®

TITLE 5501 M5-1,2

SCALE	DATE	DR	DWG	REV
1:1	10/16/01	CJC	XR0224P	A

Downloaded from Datasheet.su