THIS DRAWING IS UNPUBLISHED. RELEASED FOR PUBLICATION -.-- -
© COPYRIGHT — BY TYCO ELECTRONICS CORPORATION. ALL RIGHTS RESERVED.

UOC	DIST
AD	00

REVISIONS

P	LTR	DESCRIPTION	DATE	DRN	APVD
	J	EC 0G3C 0209 05	27APR05	BSV	JLG
	J1	REVISED PER ECO-09-020689	01SEP09	KK	AEG

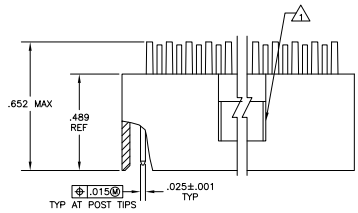

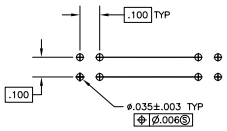

RECOMMENDED HOLE LAYOUT

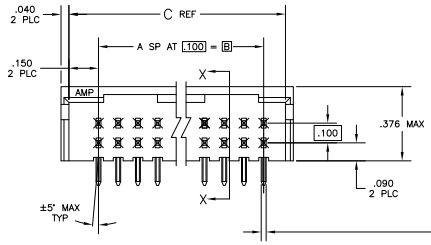

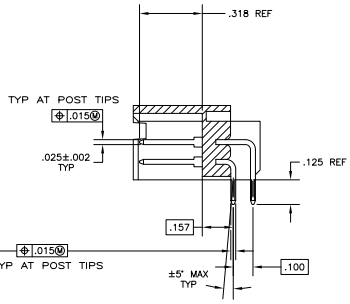

SECTION X—X

1. ACCESS SLOT.
2. CONTACT: .000100–.000200 BRIGHT TIN–LEAD OVER .000050 NICKEL.
3. CONTACT: .000100–.000200 MATTE TIN OVER .000050 NICKEL.
4. OBSOLETE PARTS: OBSOLETE CIS STREAMLINING PER D.RENAUD/D.SINISI

							PART NUMBER
		PLATING	C	B	A	NO OF POSN	
4 OBSOLETE	2	3.200	2.900	29	60		7–87568–6
	2	2.700	2.400	24	50		7–87568–1
	2	2.200	1.900	19	40		6–87568–6
	2	1.900	1.600	16	34		6–87568–3
	2	1.500	1.200	12	26		5–87568–9
	2	1.200	.900	9	20		5–87568–6
4 OBSOLETE	2	1.100	.800	8	18		5–87568–5
	2	1.000	.700	7	16		5–87568–4
	2	.900	.600	6	14		5–87568–3
	2	.800	.500	5	12		5–87568–2
	2	.700	.400	4	10		5–87568–1
OBSOLETE	2	3.800	3.500	35	72		3–87568–2
OBSOLETE	2	3.700	3.400	34	70		3–87568–1
OBSOLETE	2	3.600	3.300	33	68		3–87568–0
OBSOLETE	2	3.500	3.200	32	66		2–87568–9
OBSOLETE	2	3.400	3.100	31	64		2–87568–8
OBSOLETE	2	3.300	3.000	30	62		2–87568–7
4 OBSOLETE	2	3.200	2.900	29	60		2–87568–6
OBSOLETE	2	3.100	2.800	28	58		2–87568–5
OBSOLETE	2	3.000	2.700	27	56		2–87568–4
OBSOLETE	2	2.900	2.600	26	54		2–87568–3
OBSOLETE	2	2.800	2.500	25	52		2–87568–2
4 OBSOLETE	2	2.700	2.400	24	50		2–87568–1
OBSOLETE	2	2.600	2.300	23	48		2–87568–0
OBSOLETE	2	2.500	2.200	22	46		1–87568–9
OBSOLETE	2	2.400	2.100	21	44		1–87568–8
OBSOLETE	2	2.300	2.000	20	42		1–87568–7
4 OBSOLETE	2	2.200	1.900	19	40		1–87568–6
OBSOLETE	2	2.100	1.800	18	38		1–87568–5
OBSOLETE	2	2.000	1.700	17	36		1–87568–4
4 OBSOLETE	2	1.900	1.600	16	34		1–87568–3
OBSOLETE	2	1.800	1.500	15	32		1–87568–2
OBSOLETE	2	1.700	1.400	14	30		1–87568–1
OBSOLETE	2	1.600	1.300	13	28		1–87568–0
4 SUPERSEDED	2	1.500	1.200	12	26		87568–9
OBSOLETE	2	1.400	1.100	11	24		87568–8
OBSOLETE	2	1.300	1.000	10	22		87568–7
4 SUPERSEDED	2	1.200	.900	9	20		87568–6
	2	1.100	.800	8	18		87568–5
4 OBSOLETE	2	1.000	.700	7	16		87568–4
	2	.900	.600	6	14		87568–3
	2	.800	.500	5	12		87568–2
	2	.700	.400	4	10		87568–1

THIS DRAWING IS A CONTROLLED DOCUMENT.

DIMENSIONS: INCHES

TOLERANCE UNLESS OTHERWISE SPECIFIED:
0 PLC ± –
1 PLC ± –
2 PLC ± –
3 PLC ± .005
4 PLC ± .000
ANGLES ± –

MATERIAL: SEE TABLE
FINISH: SEE TABLE

DR S.A.SHUEY 11OCT89
CHK R. ELICKER 25OCT89
APVD R. ELICKER 25OCT89
PRODUCT SPEC –
APPLICATION SPEC –
WEIGHT –

Tyco Electronics Corporation
Harrisburg, Pa 17105-3608

NAME: HEADER ASSY, MOD II, DBL ROW, .100X.100 C/L, RIGHT ANGLE, (3) SIDED SHROUD

SIZE A1 | CAGE CODE 00779 | DRAWING NO C-87568 | RESTRICTED TO –

CUSTOMER DRAWING | SCALE 4:1 | SHEET 1 OF 1 | REV J1

Downloaded from Datasheet.su