3M™ Ribbon Cable Socket 2 mm X 2 mm Pitch 158 Series

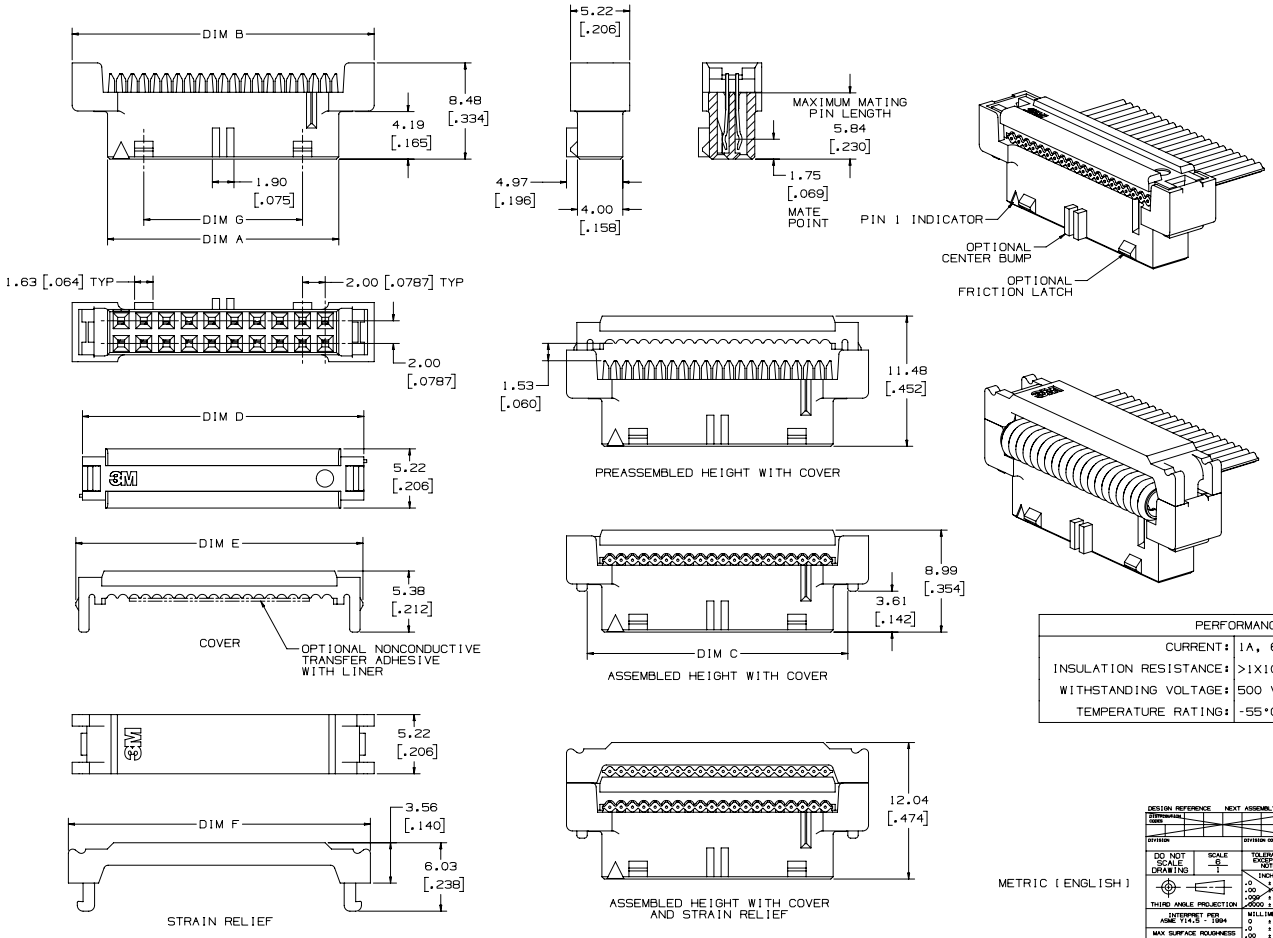

NOTES

1 MATERIAL:
BODY: HIGH TEMP GLASS FILLED POLYESTER, GRAY UL94V-0
CONTACTS: COPPER ALLOY

2 PLATING:
2.03-3.81 μm [80-150 μin] NICKEL UNDERPLATE
0.38 μm [15 μin] OR 0.76 μm [30 μin] AVG GOLD ON WIPING AREA.

3 RIBBON CABLE:
RECOMMENDED: 3M™ 3625 (28 AWG, 7 STRAND).

4 APPLICATION TOOLS:
3460 PRESS (OR EQUIVALENT)
3443-119 LOCATOR PLATE,
3442-9 PLATEN
SEE 3M INSTRUCTION SHEET 78-9101-2810-3.

5 MATES WITH 3M™ HEADERS 159 SERIES (REFERENCE 3M DRAWING 78-5100-2359-7). (0.51 mm [.020 in] SQ, CROWNED PINS).

6 SEE THE REGULATORY INFORMATION APPENDIX (RIA) IN THE "RoHS COMPLIANCE" SECTION OF WWW.3MCONNECTOR.COM FOR COMPLIANCE INFORMATION (RIA E1 & C1 APPLY).

7 FOR PRODUCT SPECIFICATIONS AND WARRANTY INFORMATION SEE 3M 78-5102-0078-1.

8 IN THE EVENT OF CONFLICT BETWEEN THIS DATA AND THAT CONTAINED IN THE PRODUCT SPECIFICATION, THE PRODUCT SPECIFICATION TAKES PRECEDENT.

PERFORMANCE 7 8	
CURRENT:	1A, 6 LINES ENERGIZED
INSULATION RESISTANCE:	>1X10⁹ OHMS AT 500 VDC
WITHSTANDING VOLTAGE:	500 VACrms AT SEA LEVEL
TEMPERATURE RATING:	-55°C TO +105°C

REV	ECO	ISSUE DATE AND DESCRIPTION	DRFT	CHKD
B	31126	NOV 11,2010 ADDED DIMENSIONS REVISED ORDERING INFORMATION	LDS	SF
A	30741	OCT 28,2010 INITIAL RELEASE	LDS	SF

DESIGN REFERENCE: STRAIN RELIEF, CABLE
NEXT ASSEMBLY
DRW L. SCHMIDT DATE JUL 23,2010
APR S. FELDMAN DATE OCT 30,2010
DIVISION
DIVISION CODE
DO NOT SCALE DRAWING
SCALE 6 / 1
TOLERANCES EXCEPT AS NOTED: INCHES .X ±.1, .XX ±.05, .XXX ±.010, .XXXX ±.0050; MILLIMETERS .0 ±1, .00 ±.13, .000 ±.010; ANGLES ±1°
THIRD ANGLE PROJECTION
INTERPRET PER ASME Y14.5 - 1994
MAX SURFACE ROUGHNESS 125 √ ☐ ALL SURFACES ☒ MARKED ONLY

© 3M COPYRIGHT 2010
This document and the information it contains are the property of 3M and may not be reproduced or further distributed without the permission, in part or in whole, of 3M. Reproduction for 3M authorized purposes, all rights reserved.

TITLE: 3M RIBBON CABLE SOCKET 2 MM x 2 MM PITCH 158 SERIES
CAGE NUMBER: 3T7G1 STYLE: D DRAWING NO. 78-5100-2358-9 REV. B
MODEL
☐ LSTS ☐ YES ☒ NO SHT 1 OF 2

METRIC [ENGLISH]

Downloaded from Datasheet.su

3M™ Ribbon Cable Socket 2 mm X 2 mm Pitch 158 Series

NUMBER OF POSITIONS	DIM A	DIM B	DIM C	DIM D	DIM E	DIM F	DIM G
6	6.39 [.252]	12.64 [.497]	8.98 [.354]	10.81 [.426]	11.32 [.446]	12.64 [.497]	N/A
8	8.39 [.330]	14.64 [.576]	10.98 [.432]	12.81 [.504]	13.32 [.524]	14.64 [.576]	N/A
10	10.39 [.409]	16.64 [.655]	12.98 [.511]	14.81 [.583]	15.32 [.603]	16.64 [.655]	N/A
12	12.39 [.488]	18.64 [.734]	14.98 [.590]	16.81 [.662]	17.32 [.682]	18.64 [.734]	N/A
14	14.39 [.567]	20.64 [.812]	16.98 [.669]	18.81 [.741]	19.32 [.761]	20.64 [.812]	8.00 [.315]
16	16.39 [.645]	22.64 [.891]	18.98 [.747]	20.81 [.819]	21.32 [.839]	22.64 [.891]	10.00 [.394]
20	20.39 [.803]	26.64 [1.049]	22.98 [.905]	24.81 [.977]	25.32 [.997]	26.64 [1.049]	14.00 [.551]
22	22.39 [.882]	28.64 [1.127]	24.98 [.984]	26.81 [1.056]	27.32 [1.076]	28.64 [1.127]	16.00 [.630]
24	24.39 [.960]	30.64 [1.206]	26.98 [1.062]	28.81 [1.134]	29.32 [1.154]	30.64 [1.206]	18.00 [.709]
26	26.39 [1.039]	32.64 [1.285]	28.98 [1.141]	30.81 [1.213]	31.32 [1.233]	32.64 [1.285]	20.00 [.787]
30	30.39 [1.197]	36.64 [1.442]	32.98 [1.299]	34.81 [1.371]	35.32 [1.391]	36.64 [1.442]	24.00 [.945]
34	34.39 [1.354]	40.64 [1.600]	36.98 [1.456]	38.81 [1.528]	39.32 [1.548]	40.64 [1.600]	28.00 [1.102]
40	40.39 [1.590]	46.64 [1.836]	42.98 [1.692]	44.81 [1.764]	45.32 [1.784]	46.64 [1.836]	34.00 [1.339]
44	44.39 [1.748]	50.64 [1.994]	46.98 [1.850]	48.81 [1.922]	49.32 [1.942]	50.64 [1.994]	38.00 [1.496]
50	50.39 [1.984]	56.64 [2.230]	52.98 [2.086]	54.81 [2.158]	55.32 [2.178]	56.64 [2.230]	44.00 [1.732]

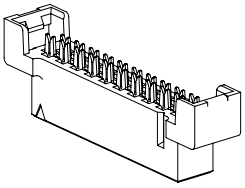

SOCKET WITHOUT OPTIONS
ALL POSITIONS

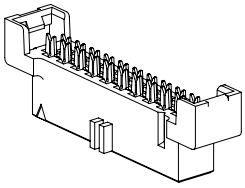

CENTER BUMP OPTION
ALL POSITIONS

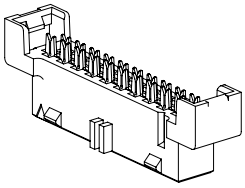

CENTER BUMP WITH
FRICTION BUMP OPTION
14-50 POSITIONS

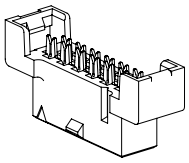

CENTER FRICTION BUMP OPTION
6-12 POSITIONS ONLY

ORDERING INFORMATION

TIER 1 - BEST

1581XX-1X00

- TIER: 1 = BEST
- POSITION COUNT (SEE TABLE)
- PART CONFIGURATION: 1 = ADHESIVE COVER
- POLARIZATION/LATCHING: 1 = CENTER BUMP, NO FRICTION BUMP
- PLATING: BLANK = 0.76 μm [30 μin] GOLD
- PACKAGING: 0 = TRAY

TIER 2 - BETTER

1582XX-0X20XX

- TIER: 2 = BETTER
- POSITION COUNT (SEE TABLE)
- PART CONFIGURATION: 0 = PREASSEMBLED COVER
- POLARIZATION/LATCHING: 0 = WITHOUT CENTER BUMP; 1 = CENTER BUMP, NO FRICTION BUMP; 2 = CENTER BUMP AND FRICTION BUMP
- PLATING: BLANK = 0.76 μm [30 μin] GOLD; 15 = 0.38 μm [15 μin] GOLD
- PACKAGING: 2 = SWORDS

TIER 3 - VALUE

1583XX-211015

- TIER: 3 = VALUE
- POSITION COUNT (SEE TABLE)
- PART CONFIGURATION: 2 = SEPARATE COVER
- POLARIZATION/LATCHING: 1 = CENTER BUMP, NO FRICTION BUMP
- PLATING: 15 = 0.38 μm [15 μin] GOLD
- PACKAGING: 1 = BULK PACK

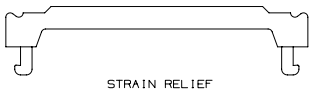

STRAIN RELIEF
3448-158XX
POSITION COUNT (SEE TABLE)

METRIC [ENGLISH]

REV	ECO	ISSUE DATE AND DESCRIPTION	DRFT	CHKD
B	31126	NOV 11,2010 ADDED DIMENSIONS REVISED ORDERING INFORMATION	LDS	SF
A	30741	OCT 28,2010 INITIAL RELEASE	LDS	SF

DESIGN REFERENCE: STRAIN RELIEF, CSES — NEXT ASSEMBLY

DRW: L. SCHMIDT — DATE: JUL 23,2010
CHKD: S. FELDMAN — DATE: OCT 30,2010

DIVISION — DIVISION CODE

DO NOT SCALE DRAWING — SCALE 6/1 — TOLERANCES EXCEPT AS NOTED: INCHES .0 ±, .00 ±, .000 ±, .0000 ±; MILLIMETERS .0 ±, .00 ±, .000 ±

THIRD ANGLE PROJECTION — INTERPRET PER ASME Y14.5 - 1994 — ANGLES ±1°

MAX SURFACE ROUGHNESS 125 — ALL SURFACES — MARKED ONLY

© 3M COPYRIGHT 2010
This document and the information it contains are the property of 3M and may not be reproduced or further distributed without the permission, or use of 3M technology, for 3M subsidiary purposes. All rights reserved.

3M Center, St. Paul, MN 55144

TITLE: 3M RIBBON CABLE SOCKET 2 MM x 2 MM PITCH 158 SERIES

CAGE NUMBER — SIZE D — DRAWING NO. 78-5100-2358-9 — REV. B

MODEL — DATA: ☐ STS ☐ YES ☒ NO — SHT 2 OF 2

Downloaded from Datasheet.su