REV.	DATE	DESCRIPTION
A	09/10/02	ADD STRIPPING DIMENSIONS

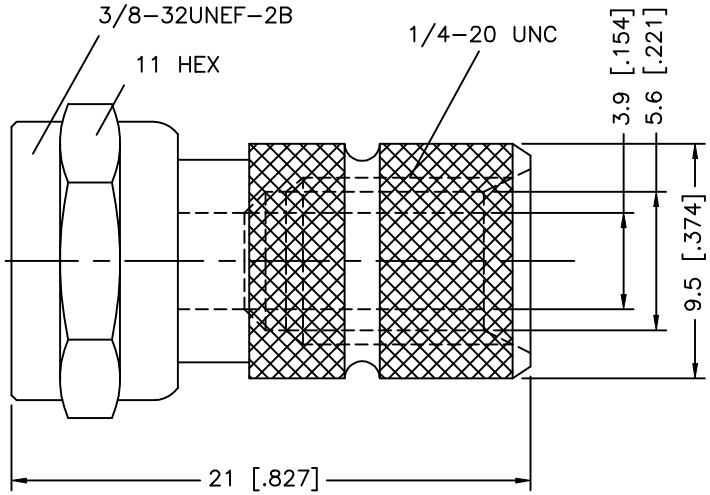

RECOMMENDED CABLE
STRIPPING DIMS
(STEP #1)

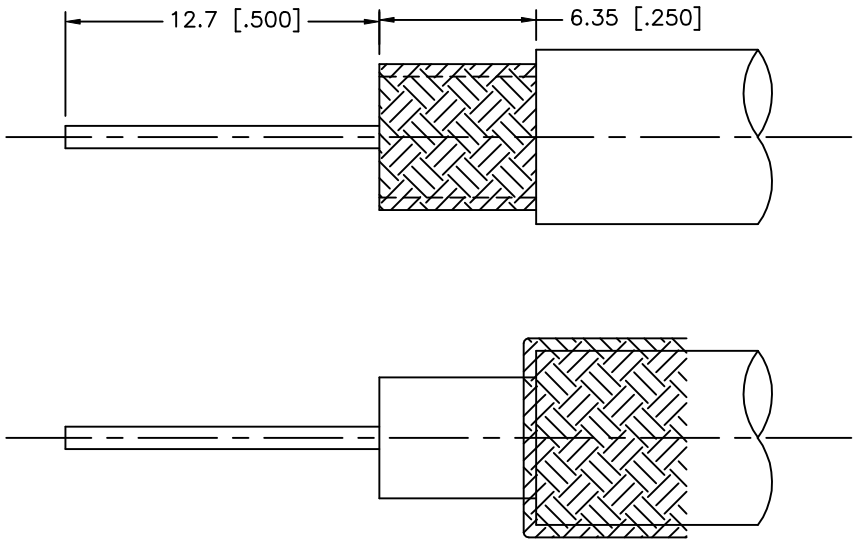

(STEP #2)

8			
7			
6			
5			
4			
3			
2	SHELL	BRASS	GOLD
1	BODY	BRASS	GOLD
	DESCRIPTION	MATERIAL	FINISH

UNLESS OTHERWISE SPECIFIED DIMENSIONS ARE IN MILLIMETERS

DIMENSIONS IN [ ] ARE IN INCHES FOR CUSTOMER REFERANCE ONLY

UNLESS OTHERWISE SPECIFIED TOLERANCES FOR INCHES ARE:

.XXX = ± 0.005"
.XX = ± 0.010"
.X = ± 0.020"

DO NOT SCALE DRAWING

APPROVALS		DATE
DRAWN	G.R.S.	09/10/02
CHECKED		
ISSUED		

Amphenol - Connex
CONNECTOR CORPORATION

TITLE
F TWIST–ON PLUG
(FOR RG59/U CABLE)

SIZE	FSCM NO.	DWG. NO.	REV.
A	99001	222159.DWG	A
SCALE NA	PART NO. 222159		SHEET 1 OF 1