THIS DRAWING IS UNPUBLISHED. RELEASED FOR PUBLICATION 20
© COPYRIGHT 20 BY TYCO ELECTRONICS CORPORATION. ALL RIGHTS RESERVED.

LOC J | DIST

REVISIONS 改版

P	LTR	DESCRIPTION	ECN	DATE	DWN	APVD
	O	RELEASED	FJA0-0576-04	24AUG04	YM	HY
	A	REIVSED	ECR-10-005857	26APR10	SF	KB

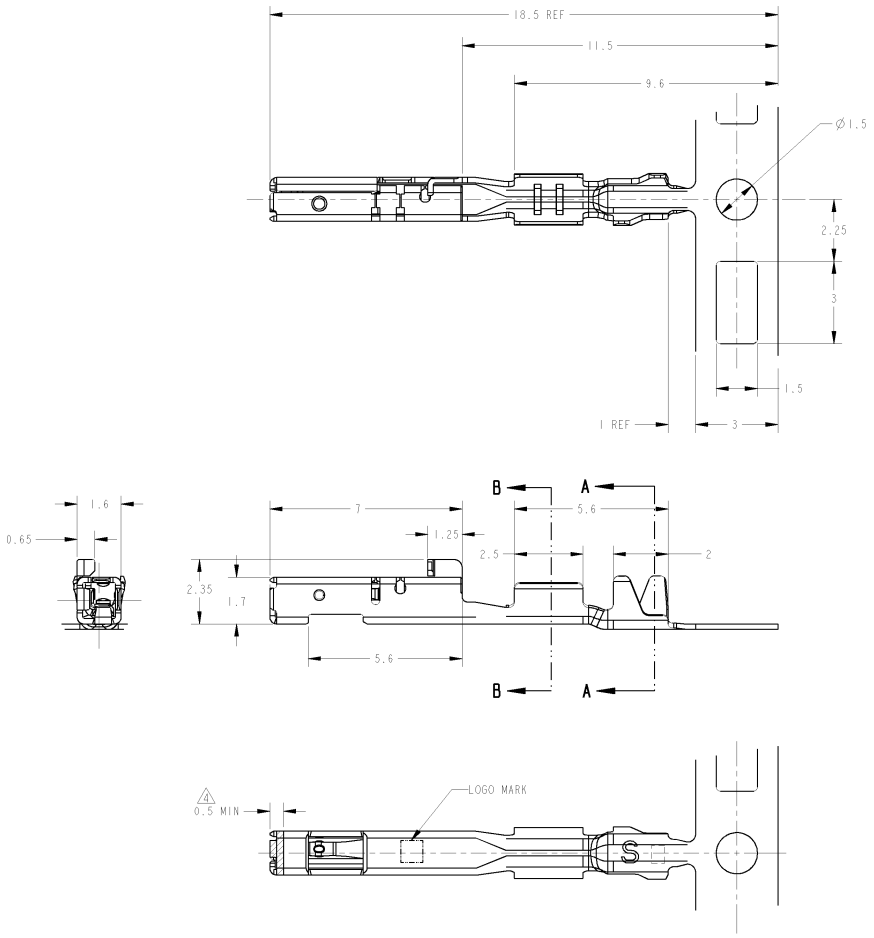

1. 適用電線:
   CAVS/CAVUS/CHFUS 0.22mm^2
2. 圧着作業については,以下の規格を参照すること
   取付適用規格; 114-5329
3. アプリケータ送りピッチ;8mm
4. 寸法は鍍金用金めっき範囲を表す
5. 接触部:金めっき, バレル部:すずめっき

1. APPLICABLE WIRE RANGE ;
   CAVS/CAVUS/CHFUS 0.22mm^2
2. MUST BE REFERRED TO THE FOLLOWING
   DOCUMENTS FOR CRIMPING OPERATION
   APPLICATION SPEC ; 114-5329
3. APPLICATOR FEED;8mm
4. GOLD PLATED AREA FOR DISCRIMINATION
5. CONTACT POINT;GOLD PLATING
   BARREL;TIN PLATING

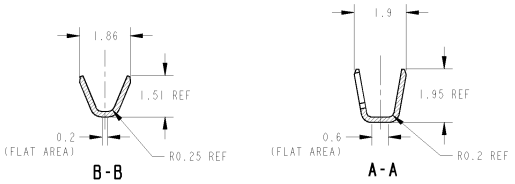

4 5 SELECTIVE GOLD,TIN	1674936-2
PRE-TIN	1674936-1
FINISH	TYCO PART NO.

THIS DRAWING IS A CONFIDENTIAL DOCUMENT OF TYCO ELECTRONICS CORPORATION IT IS UNPUBLISHED, EXPIRES AFTER 1 YEAR, CONTROLLED UNCLASSIFIED INFORMATION SHOULD BE CONTACTED FOR THE LATEST REVISION.

DIMENSIONS: 特記: 他 mm

TOLERANCES UNLESS OTHERWISE SPECIFIED: 一般公差 ±0.3
0 PLC ±
1 PLC ±0.5
2 PLC ±0.13
3 PLC ±0.013
4 PLC ±0.0001
ANGLES ±5° 00'

MATERIAL 材料: Cu Alloy
FINISH 仕上: SEE TABLE

DWN Y. MITO 24AUG04
CHK H. YAMAGAMI 24AUG04
APVD S. ISOHATA 24AUG04
PRODUCT SPEC 製品規格: –
APPLICATION SPEC 取付適用規格: 114-5329
WEIGHT 重量: 0.14 g
CUSTOMER DRAWING

Tyco Electronics
Tyco Electronics Corporation
Kawasaki, Japan

NAME 品名: 0.64III SERIES CONNECTOR RECEPTACLE CONTACT (S)

SIZE A2 | CAGE CODE 00779 | DRAWING NO 製図番 C-1674936 | RESTRICTED NO –

SCALE 2:1 | SHEET 1 OF 1 | REV A

AMP 1471-9 REV 31MAR2008

Downloaded from Datasheet.su