THIS DRAWING IS UNPUBLISHED. RELEASED FOR PUBLICATION 20
© COPYRIGHT 20 BY - ALL RIGHTS RESERVED.

LOC	DIST
AD	00

REVISIONS

P	LTR	DESCRIPTION	DATE	DRN	APVD
	A1	REVISED PER ECO-11-004917	12MAR2011	RK	HMR

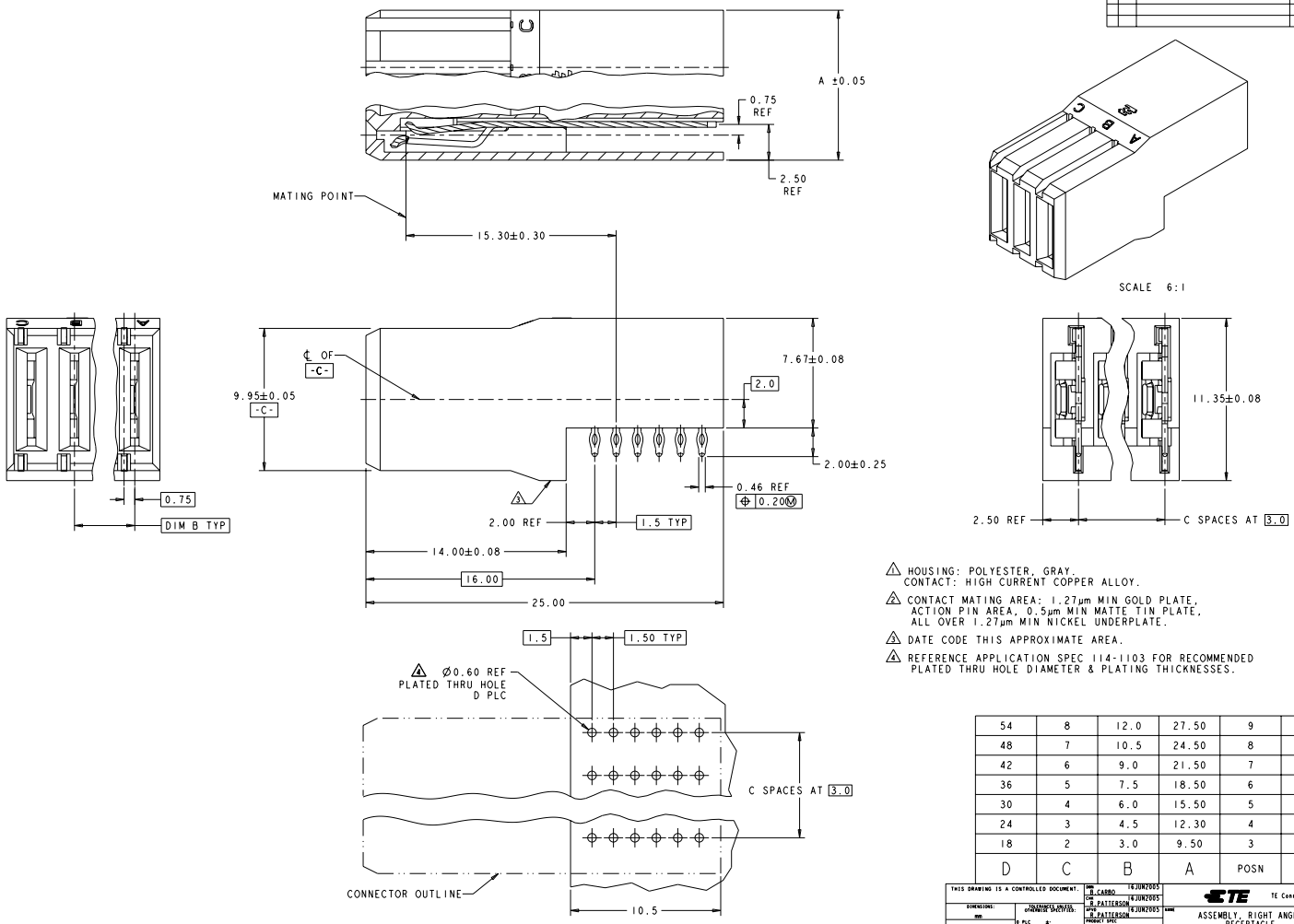

RECOMMENDED PCB HOLE LAYOUT

1. HOUSING: POLYESTER, GRAY.
   CONTACT: HIGH CURRENT COPPER ALLOY.
2. CONTACT MATING AREA: 1.27µm MIN GOLD PLATE, ACTION PIN AREA, 0.5µm MIN MATTE TIN PLATE, ALL OVER 1.27µm MIN NICKEL UNDERPLATE.
3. DATE CODE THIS APPROXIMATE AREA.
4. REFERENCE APPLICATION SPEC 114-1103 FOR RECOMMENDED PLATED THRU HOLE DIAMETER & PLATING THICKNESSES.

D	C	B	A	POSN	PART NUMBER
54	8	12.0	27.50	9	120943-7
48	7	10.5	24.50	8	120943-6
42	6	9.0	21.50	7	120943-5
36	5	7.5	18.50	6	120943-4
30	4	6.0	15.50	5	120943-3
24	3	4.5	12.30	4	120943-2
18	2	3.0	9.50	3	120943-1

THIS DRAWING IS A CONTROLLED DOCUMENT.

DIMENSIONS: mm

TOLERANCES UNLESS OTHERWISE SPECIFIED:
0 PLC ±-
1 PLC ±-
2 PLC ±0.13
3 PLC ±-
4 PLC ±-
ANGLES ±-
FINISH -

MATERIAL -

DWN R. CABRO 16JUN2005
CHK R. PATTERSON 16JUN2005
APVD R. PATTERSON 16JUN2005
PRODUCT SPEC -
APPLICATION SPEC -
WEIGHT -

TE Connectivity

NAME ASSEMBLY, RIGHT ANGLE, RECEPTACLE, UNIVERSAL POWER MODULE

SIZE A1 | CAGE CODE 00779 | DRAWING NO C-120943 | RESTRICTED TO -

CUSTOMER DRAWING | SCALE 10:1 | SHEET 1 OF 1 | REV A1

4005 12/11

Pro/ENGINEER DRAWING

Downloaded from Datasheet.su