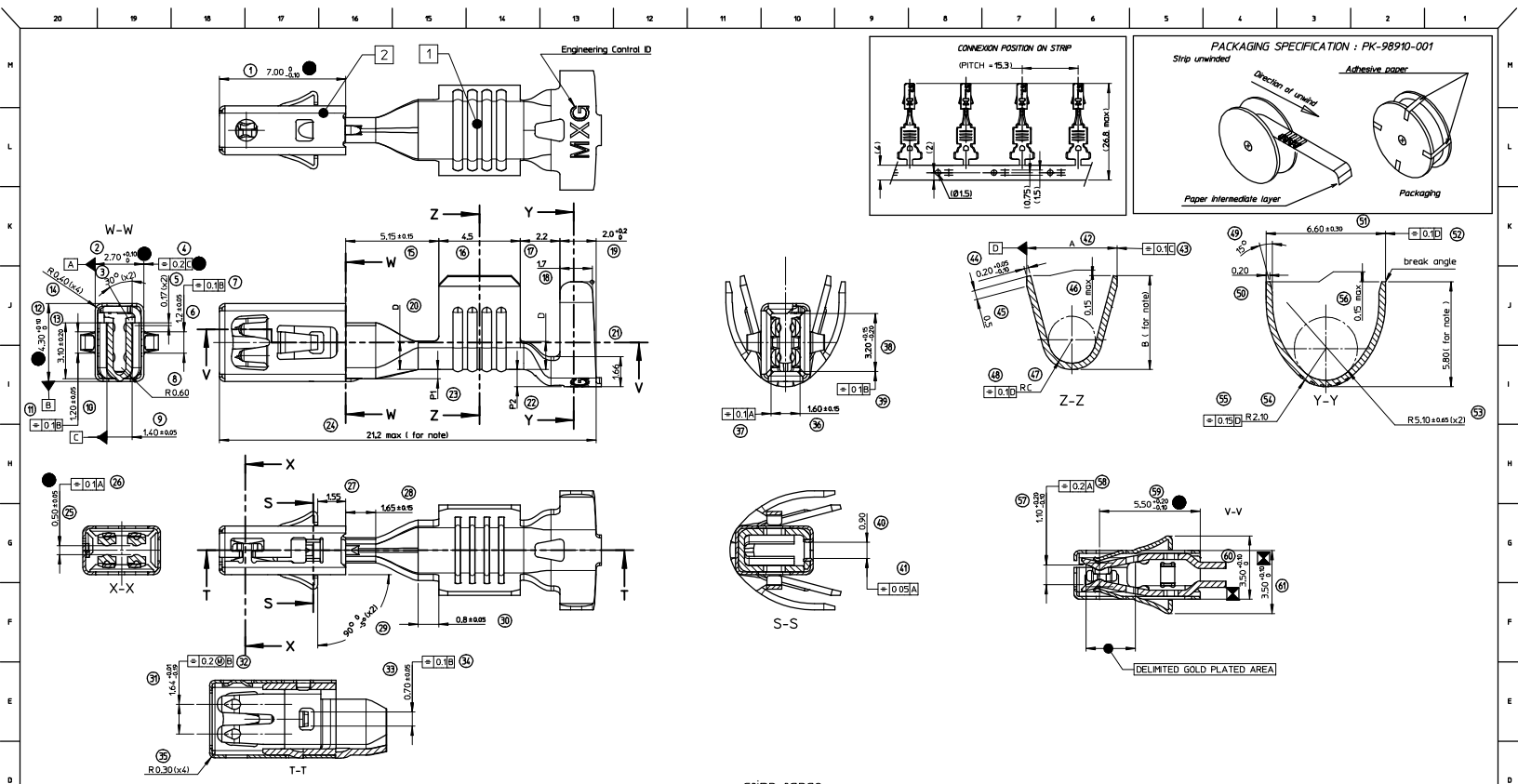


NOTE:
- CRIMPING SPECIFICATION ACCORDING TO CS-64324-001

| MARK | DESIGNATION | MATERIAL |
|---|---|---|
| 2 | BOX TERMINAL | STAINLESS STEEL thickness : 0,15 mm |
| 1 | BODY TERMINAL | HIGH CONDUCTIVITY COPPER ALLOY thickness : 0,35 mm |

| MATERIAL NUMBER | CONTACT AREA | CRIMPING AREA | UNDERLAYER | CRIMPING RANGE (mm2) | A ±0,2 | B | rC ±0,1 | D ±0,1 | P1 ±0,1 | P2 ±0,1 | WEIGHT (g) | Identification |
|---|---|---|---|---|---|---|---|---|---|---|---|---|
| | PLATING | | | | | | | | | | | |
| 0643241119 | Au 1,27µ MINI | Sn | Ni | >3 TO 5 | 5.0 | 5.2 | 1.3 | 1.55 | 0.5 | 0.95 | 0.4902 | D |
| 0643241019 | Sn | Sn | | | | | | | | | 0.4795 | |
| 0643241129 | Au 1,27µ MINI | Sn | Ni | >2 TO 3 | 4.1 | 4.4 | 1.0 | 1.45 | 0.5 | 0.95 | 0.4604 | C |
| 0643241029 | Sn | Sn | | | | | | | | | 0.4470 | |
| 0643241139 | Au 1,27µ MINI | Sn | Ni | >1 TO 2 | 4.1 | 3.5 | 0.9 | 1.3 | $0.85^{+0.1}_{-0.2}$ | $1.3^{+0.1}_{-0.2}$ | 0.4274 | B |
| 0643241039 | Sn | Sn | | | | | | | | | 0.4191 | |
| 0643241149 | Au 1,27µ MINI | Sn | Ni | 0,50 TO 1 | 2.8 | 2.6 | 0.7 | 1.1 | $0.85^{+0.1}_{-0.2}$ | 1.3 | 0.3916 | A |
| 0643241049 | Sn | Sn | | | | | | | | | 0.3815 | |

crimp range identification

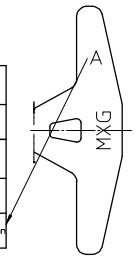


(SKC) COTES CARACTERISTIQUES SPECIALES
SPECIAL KEY CHARACTERISTICS
INDICATION DIMENSIONS S.P.C
DENOTES S.P.C DIMENSIONS
INDICATION DIMENSIONS CRITIQUES
DENOTES CRITICAL DIMENSIONS
INDICATION DIMENSIONS FONCTIONNELLES
DENOTES FUNCTIONAL DIMENSIONS
QUANTITE PAR FEUILLE INDIVIDUELLE
QUANTITY PER INDIVIDUAL SHEET
2 0 6 (SKC) 0

Revised Dwg
EC NO: GZ0008-0440 2008/05/19
DRWN: JULOU 2008/05/19
CHKD: FPAROLARI 2008/05/19
APPR: LSTICKEIR 2008/05/19
REV DESCRIPTION

GENERAL TOLERANCES (UNLESS SPECIFIED)

| | mm | INCH |
|---|---|---|
| 4 PLACES | ± --- | ± --- |
| 3 PLACES | ± --- | ± --- |
| 2 PLACES | ± 0,10 | ± --- |
| 1 PLACE | ± 0,1 | ± --- |
| ANGULAR | ± 2 ° | |

DRAFT WHERE APPLICABLE MUST REMAIN WITHIN DIMENSIONS

DIMENSION STYLE: MM ONLY
SCALE: 10:1
DESIGN UNITS: METRIC
FIRST ANGLE PROJECTION

DRAWN BY: VGUERIN DATE: 2007/11/07
CHECKED BY: FPAROLARI DATE: 2007/11/07
APPROVED BY: LSTICKEIR DATE: 2007/11/07
MATERIAL NO.: SEE CHART
SIZE: A1

TITLE: CP RCPT TRM 2.8

molex MOLEX INCORPORATED
DOCUMENT NO.: SD-64324-001
SHEET NO.: 1 OF 1

THIS DRAWING CONTAINS INFORMATION THAT IS PROPRIETARY TO MOLEX INCORPORATED AND SHOULD NOT BE USED WITHOUT WRITTEN PERMISSION

tb_frame_A1_P_AM_F
Rev. E 2006/04/15

Downloaded from Datasheet.su