STANDARD LED LAMPS(ROUND TYPES)

Package	Part No.	Chip: Material/ Emitted Color	Chip: Peak Wave Length λp (nm)	Lens Appearance	Absolute Maximum Ratings: Δλ (nm)	Absolute Maximum Ratings: Pd (mw)	Absolute Maximum Ratings: If (mA)	Absolute Maximum Ratings: Peak (mA)	Electro-optical Data(At 20mA): Vf (V) Typ	Electro-optical Data(At 20mA): Vf (V) Max	Electro-optical Data(At 20mA): Iv (mcd) Typ.	Viewing Angle 2θ1/2 (deg)	Drawing No.
T-1 Standard 0.5" Lead 3φ	BL-B1121	GaAsP/GaAs/ Red	655	Red Diffused	40	80	40	200	1.7	2.0	3.0	45	L-017
	BL-B5121	GaP/GaP / Bright Red	700		90	40	15	50	2.2	2.6	4.0		
	BL-B4521	GaAsP/GaP/ Hi-Eff Red	635		45	80	30	150	2.0	2.6	20.0		
	BL-B2121	GaP/GaP / Green	568	Green Diffused	30	80	30	150	2.2	2.6	20.0		
	BL-B3121	GaAsP/GaP / Yellow	585	Yellow Diffused	35	80	30	150	2.1	2.6	15.0		
	BL-B4121	GaAsP/GaP / Orange	635	Orange Diffused	45	80	30	150	2.0	2.6	20.0		
	BL-B4621	GaAsP/GaP / Hi-Eff Red	635	Red Trans	45	80	30	150	2.0	2.6	45.0	40	
T-1 Standard 1.0" Lead 3φ	BL-B1131	GaAsP/GaAs/ Red	655	Red Diffused	40	80	40	200	1.7	2.0	6.0	35	L-018
	BL-B5131	GaP/GaP / Bright Red	700		90	40	15	50	2.2	2.6	8.0		
	BL-B4531	GaAsP/GaP/ Hi-Eff Red	635		45	80	30	150	2.0	2.6	40.0		
	BL-B2131	GaP/GaP / Green	568	Green Diffused	30	80	30	150	2.2	2.6	40.0		
	BL-B3131	GaAsP/GaP / Yellow	585	Yellow Diffused	35	80	30	150	2.1	2.6	30.0		
	BL-B2431	GaP/GaP / Green	568	Green Trans	30	80	30	150	2.2	2.6	80.0	30	
	BL-B3431	GaAsP/GaP / Yellow	585	Yellow Trans	35	80	30	150	2.1	2.6	65.0		
T-1 Standard 1.0" Lead 3φ	BL-B4541	GaAsP/GaP/ Hi-Eff Red	635	Red Diffused	45	80	30	150	2.0	2.6	40.0	35	L-019
	BL-B2141	GaP/GaP / Green	568	Green Diffused	30	80	30	150	2.2	2.6	40.0		
	BL-B3141	GaAsP/GaP/ Yellow	585	Yellow Diffused	35	80	30	150	2.1	2.6	30.0		
	BL-B2441	GaP/GaP / Green	568	Green Trans	30	80	30	150	2.2	2.6	80.0	30	
	BL-B3441	GaAsP/GaP/ Yellow	585	Yellow Trans	35	80	30	150	2.1	2.6	65.0		
	BL-B2341	GaP/GaP / Green	568	Water Clear	30	80	30	150	2.2	2.6	80.0		
	BL-BX1341	GaP/GaP / Hi-Eff Green	568		35	80	30	150	2.1	2.6	120.0		
T-1 Standard 1.0" Lead 3.1φ	BL-B1131A	GaAsP/GaAs/ Red	655	Red Diffused	40	80	40	200	1.7	2.0	6.0	35	L-020
	BL-B5131A	GaP/GaP / Bright Red	700		90	40	15	50	2.2	2.6	8.0		
	BL-B4531A	GaAsP/GaP/ Hi-Eff Red	635		45	80	30	150	2.0	2.6	40.0		
	BL-B2131A	GaP/GaP / Green	568	Green Diffused	30	80	30	150	2.2	2.6	40.0		
	BL-B3131A	GaAsP/GaP/ Yellow	585	Yellow Diffused	35	80	30	150	2.1	2.6	30.0		
	BL-B2431A	GaP/GaP / Green	568	Green Trans	30	80	30	150	2.2	2.6	80.0	30	
	BL-B3431A	GaAsP/GaP / Yellow	585	Yellow Trans	35	80	30	150	2.1	2.6	65.0		
T-1 Low Profile 1.0"Lead 3φ	BL-B4531E	GaAsP/GaP/ Hi-Eff Red	635	Red Diffused	45	80	30	150	2.0	2.6	30.0	45	L-021
	BL-B2131E	GaP/GaP / Green	568	Green Diffused	30	80	30	150	2.2	2.6	30.0		
	BL-B3131E	GaAsP/GaP /Yellow	585	Yellow Diffused	35	80	30	150	2.1	2.6	20.0		
	BL-B2431E	GaP/GaP / Green	568	Green Trans	30	80	30	150	2.2	2.6	65.0	30	
	BL-B3431E	GaAsP/GaP /Yellow	585	Yellow Trans	35	80	30	150	2.1	2.6	55.0		
	BL-B2331E	GaP/GaP / Green	568	Water Clear	30	80	30	150	2.2	2.6	65.0		
	BL-B3331E	GaP/GaP /Yellow	585		35	80	30	150	2.1	2.6	55.0		
1.0"Lead High Flangeless 3.4φ	BL-B1131H	GaAsP/GaAs/ Red	655	Red Diffused	40	80	40	200	1.7	2.0	10.0	30	L-022
	BL-B5131H	GaP/GaP / Bright Red	700		90	40	15	50	2.2	2.6	13.0		
	BL-B4531H	GaAsP/GaP/ Hi-Eff Red	635		45	80	30	150	2.0	2.6	40.0		
	BL-B2131H	GaP/GaP / Green	568	Green Diffused	30	80	30	150	2.2	2.6	50.0		
	BL-B3131H	GaAsP/GaP/ Yellow	585	Yellow Diffused	35	80	30	150	2.1	2.6	30.0		
	BL-B2431H	GaP/GaP / Green	568	Green Trans	30	80	30	150	2.0	2.6	100	25	
	BL-B4631H	GaAsP/GaP / Hi-Eff Red	635	Red Trans	45	80	30	150	2.0	2.6	100		
T-1 1.0"Lead High Flangeless 3.0φ	BL-B1131J	GaAsP/GaAs/ Red	655	Red Diffused	40	80	40	200	1.7	2.0	10.0	35	L-023
	BL-B5131J	GaP/GaP / Bright Red	700		90	40	15	50	2.2	2.6	13.0		
	BL-B4531J	GaAsP/GaP/ Hi-Eff Red	635		45	80	30	150	2.0	2.6	40.0		
	BL-B2131J	GaP/GaP /Yellow Green	568	Green Diffused	30	80	30	150	2.2	2.6	50.0		
	BL-B3131J	GaAsP/ GaP Yellow	585	Yellow Diffused	35	80	30	150	2.1	2.6	30.0		
	BL-B2431J	GaP/GaP / Green	568	Green Trans	30	80	30	150	2.0	2.6	100	30	
T-1 1.0"Lead 3.0φ	BL-B4331M	GaAsP/GaP/Hi-Eff Red	635	Water Clear	45	80	30	150	2.0	2.6	100	15	L-024
	BL-B2331M	GaP/GaP/ Green	568		30	80	30	150	2.0	2.6	100		
	BL-B3331M	GaAsP/GaP Yellow	585		35	80	30	150	2.1	2.6	30.0		
	BL-B4431M	GaAsP/GaP/ Hi-Eff Red	635	Orange Trans	45	80	30	150	2.0	2.6	100		
	BL-B2431M	GaP/GaP / Green	568	Green Trans	30	80	30	150	2.0	2.6	100		

Remark： 1.Hi-Eff Red / High-Efficiency Red.
2.Trans / Transparent.
3.2θ1/2 The off-axis angle at which the luminous intensity is half the axial luminous intensity.

Downloaded from Datasheet.su

STANDARD LED LAMPS(ROUND TYPES)

L-017 BL-Bxx21 Series

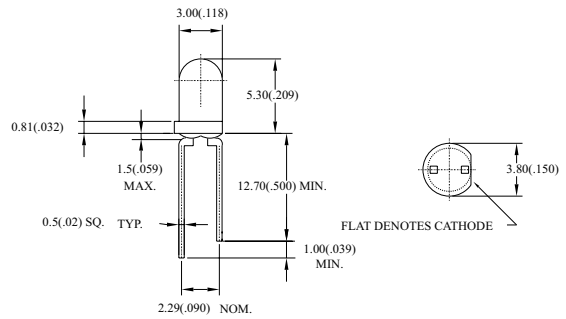

L-018 BL-Bxx31 Series

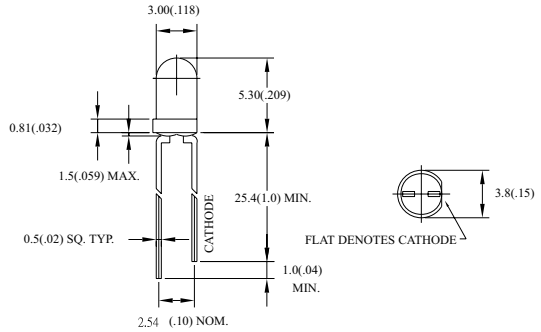

L-019 BL-Bxx41 Series

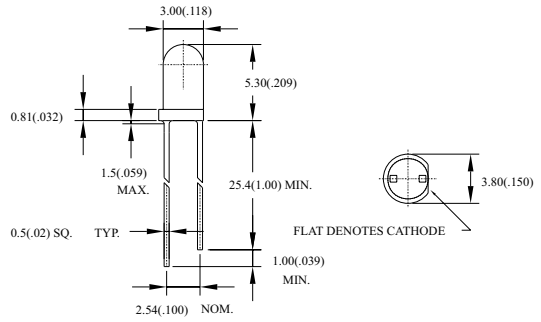

L-020 BL-Bxx31A Series

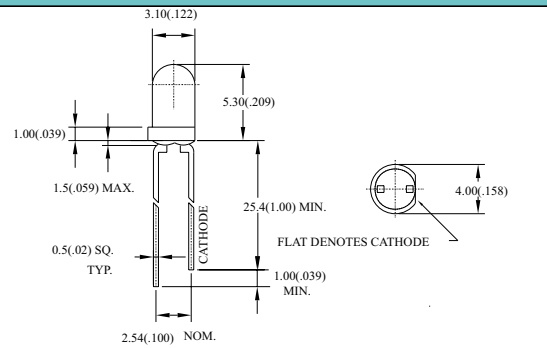

L-021 BL-Bxx31E Series

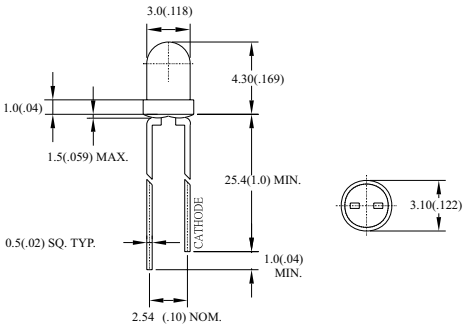

L-022 BL-Bxx31H Series

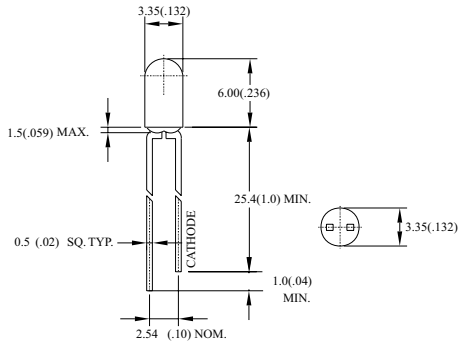

L-023 BL-Bxx31J Series

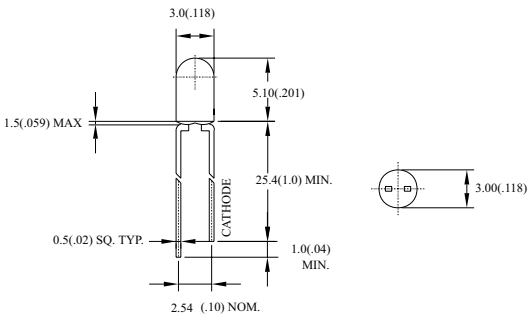

L-024 BL-Bxx31M Series

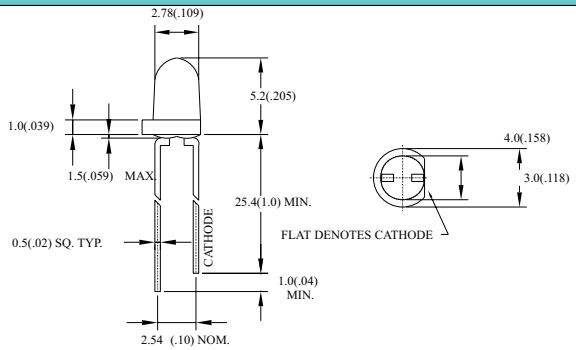

Notes： 1.All Dimensions are in millimeters (inches).
2.Tolerance is ± 0.25mm (.010").

Yellow Stone corp. www.ystone.com.tw
886-2-28221522 FAX:886-2-28202309 YELLOW STONE CORP. Specifications subject to change without notice.

Downloaded from Datasheet.su