TDK

SMD Inductors(Coils) For Power Line(Wound)

Conformity to RoHS Directive

VLP Series VLP4010

FEATURES

- Miniature size
  Mount area: 4×4mm
  Height: 1mm max.
- Generic use for portable DC to DC converter line.
- High rated DC current.
- Non-ferrite shielded component.
- Available for automatic mounting in tape and real package.
- The products do not contain lead and support lead-free soldering.

APPLICATIONS

- DC to DC converters for TFTs, LCDs, LCDs TVs, PDAs
- DC to DC converters for mobile phones, LCD driver circuits, etc.

SHAPES AND DIMENSIONS

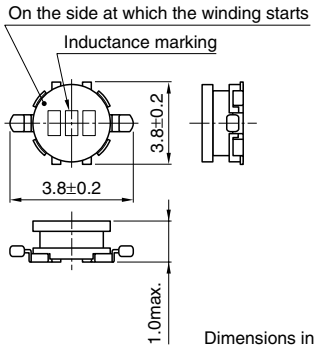

Dimensions in mm

RECOMMENDED PC BOARD PATTERN

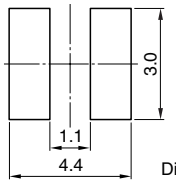

Dimensions in mm

ELECTRICAL CHARACTERISTICS

Part No.	Inductance (μH)	Inductance tolerance(%)	Test frequency (kHz)	DC resistance(Ω)		Rated current(A)*	
				max.	typ.	Based on inductance change max.	Based on temperature rise typ.
VLP4010T-4R7M1R0	4.7	±20	100	0.27	0.23	1	1

* Rated current: Value obtained when current flows and the temperature has risen to 40°C or when DC current flows and the nominal value of inductance has fallen by 30%, whichever is smaller.

- Operating temperature range: –40 to +105°C (Including self-temperature rise)

- Conformity to RoHS Directive: This means that, in conformity with EU Directive 2002/95/EC, lead, cadmium, mercury, hexavalent chromium, and specific bromine-based flame retardants, PBB and PBDE, have not been used, except for exempted applications.

• All specifications are subject to change without notice.

Downloaded from Datasheet.su