TEXAS INSTRUMENTS
Data sheet acquired from Harris Semiconductor
SCHS095B – Revised July 2003

CD40102B, CD40103B Types

CMOS 8-Stage Presettable Synchronous Down Counters

High-Voltage Types (20-Volt Rating)

CD40102B – 2-Decade BCD Type
CD40103B – 8-Bit Binary Type

■ CD40102B, and CD40103B consist of an 8-stage synchronous down counter with a single output which is active when the internal count is zero. The CD40102B is configured as two cascaded 4-bit BCD counters, and the CD40103B contains a single 8-bit binary counter. Each type has control inputs for enabling or disabling the clock, for clearing the counter to its maximum count, and for presetting the counter either synchronously or asynchronously. All control inputs and the CARRY-OUT/ZERO-DETECT output are active-low logic.

In normal operation, the counter is decremented by one count on each positive transition of the CLOCK. Counting is inhibited when the CARRY-IN/COUNTER ENABLE ($\overline{CI/CE}$) input is high. The CARRY-OUT/ZERO-DETECT ($\overline{CO/ZD}$) output goes low when the count reaches zero if the $\overline{CI/CE}$ input is low, and remains low for one full clock period.

When the SYNCHRONOUS PRESET-ENABLE ($\overline{SPE}$) input is low, data at the JAM input is clocked into the counter on the next positive clock transition regardless of the state of the $\overline{CI/CE}$ input. When the ASYNCHRONOUS PRESET-ENABLE ($\overline{APE}$) input is low, data at the JAM inputs is asynchronously forced into the counter regardless of the state of the $\overline{SPE}$, $\overline{CI/CE}$, or CLOCK inputs. JAM inputs JO-J7 represent two 4-bit BCD words for the CD40102B and a single 8-bit binary word for the CD40103B.

When the CLEAR ($\overline{CLR}$) input is low, the counter is asynchronously cleared to its maximum count (99_{10} for the CD40102B and 255_{10} for the CD40103B) regardless of the state of any other input. The precedence relationship between control inputs is indicated in the truth table.

If all control inputs except $\overline{CI/CE}$ are high at the time of zero count, the counters will jump to the maximum count, giving a counting sequence of 100 or 256 clock pulses long.

This causes the $\overline{CO/ZD}$ output to go low to enable the clock on each succeeding clock pulse.

The CD40102B and CD40103B may be cascaded using the $\overline{CI/CE}$ input and the $\overline{CO/ZD}$ output, in either a synchronous or ripple mode as shown in Figs.21 and 22.

The CD40102B and CD40103B types are supplied in 16-lead dual-in-line plastic packages (E suffix), 16-lead small-outline packages (NSR suffix), and 16-lead thin shrink small-outline packages (PW and PWR suffixes). The CD40103B types also are supplied in 16-lead hermetic dual-in-line ceramic packages (F3A suffix).

Features:

- **Synchronous or asynchronous preset**
- **Medium-speed operation: f_{CL} = 3.6 MHz (typ.) @ V_{DD} = 10 V**
- **Cascadable**
- **100% tested for quiescent current at 20 V**
- **Maximum input current of 1 μA at 18 V over full package-temperature range; 100 nA at 18 V and 25°C**
- **Noise margin (full package-temperature range) = 1 V at V_{DD} = 5 V; 2 V at V_{DD} = 10 V; 2.5 V at V_{DD} = 15 V**
- **Standardized, symmetrical output characteristics**
- **5-V, 10-V, and 15-V parametric ratings**
- **Meets all requirements of JEDEC Tentative Standard No. 13B, "Standard Specifications for Description of 'B' Series CMOS Devices"**

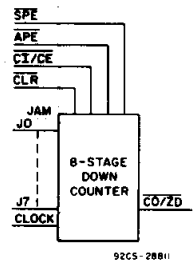

CD40102B, CD40103B FUNCTIONAL DIAGRAM

Applications:

- **Divide-by-"N" counters**
- **Programmable timers**
- **Interrupt timers**
- **Cycle/program counter**

RECOMMENDED OPERATING CONDITIONS AT T_A = 25°C, Unless Otherwise Specified

For maximum reliability, nominal operating conditions should be selected so that operation is always within the following ranges.

Characteristic	V_{DD}	LIMITS Min.	LIMITS Max.	Units
Supply Voltage Range (At T_A = Full Package-Temperature Range)		3	18	V
Clock Pulse Width, t_W	5	300	–	ns
	10	180	–	
	15	80	–	
$\overline{Clear}$ Pulse Width, t_W	5	320	–	ns
	10	160	–	
	15	100	–	
$\overline{APE}$ Pulse Width, t_W	5	360	–	ns
	10	160	–	
	15	120	–	
Clock Input Frequency, f_{CL}	5	–	0.7	MHz
	10	–	1.8	
	15	–	2.4	
Clock Rise and Fall Time, t_rCL, t_fCL	5	–	15	μs
	10	–		
	15	–		
$\overline{SPE}$ Setup Time, t_{SU}	5	280	–	ns
	10	140	–	
	15	100	–	
Jam Setup Time, t_{SU}	5	200	–	ns
	10	80	–	
	15	60	–	
$\overline{CI/CE}$ Setup Time, t_{SU}	5	500	–	ns
	10	250	–	
	15	150	–	

Copyright © 2003, Texas Instruments Incorporated

Downloaded from Datasheet.su

MAXIMUM RATINGS, *Absolute-Maximum Values:*

DC SUPPLY-VOLTAGE RANGE, (V_{DD})
Voltages referenced to V_{SS} Terminal) ..... -0.5V to +20V
INPUT VOLTAGE RANGE, ALL INPUTS ..... -0.5V to V_{DD} +0.5V
DC INPUT CURRENT, ANY ONE INPUT ..... ±10mA
POWER DISSIPATION PER PACKAGE (P_D):
For T_A = -55°C to +100°C 500mW
For T_A = +100°C to +125°C ..... Derate Linearity at 12mW/°C to 200mW
DEVICE DISSIPATION PER OUTPUT TRANSISTOR
FOR T_A = FULL PACKAGE-TEMPERATURE RANGE (All Package Types) 100mW
OPERATING-TEMPERATURE RANGE (T_A) ..... -55°C to +125°C
STORAGE TEMPERATURE RANGE (T_{stg}) ..... -65°C to +150°C
LEAD TEMPERATURE (DURING SOLDERING):
At distance 1/16 ± 1/32 inch (1.59 ± 0.79mm) from case for 10s max ..... +265°C

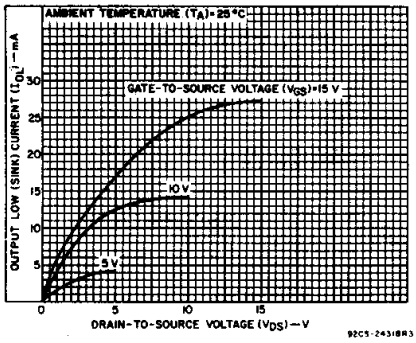

Fig. 1 — Typical output low (sink) current characteristics.

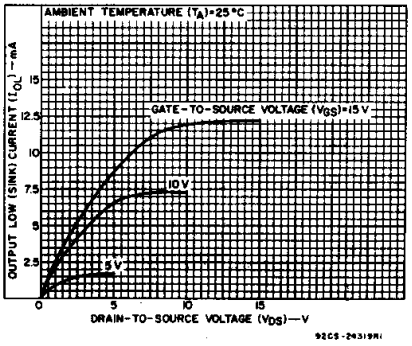

Fig. 2 — Minimum output low (sink) current characteristics.

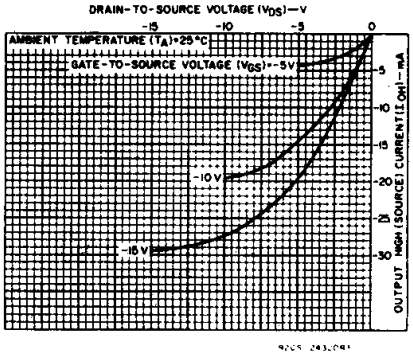

Fig. 3 — Typical output high (source) current characteristics.

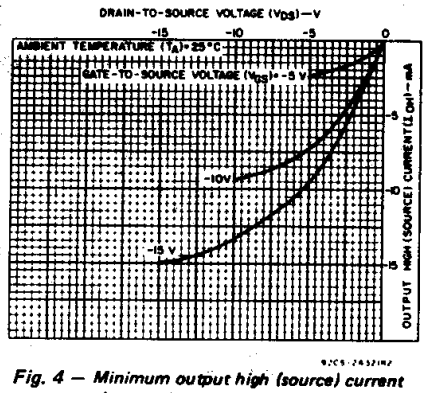

Fig. 4 — Minimum output high (source) current characteristics.

STATIC ELECTRICAL CHARACTERISTICS

CHARACTERISTIC	CONDITIONS			LIMITS AT INDICATED TEMPERATURES (°C)							UNITS
	V_O (V)	V_{IN} (V)	V_{DD} (V)	-55	-40	+85	+125	+25 Min.	+25 Typ.	+25 Max.	
Quiescent Device Current, I_{DD} Max.	–	0,5	5	5	5	150	150	–	0.04	5	μA
	–	0,10	10	10	10	300	300	–	0.04	10	
	–	0,15	15	20	20	600	600	–	0.04	20	
	–	0,20	20	100	100	3000	3000	–	0.08	100	
Output Low (Sink) Current I_{OL} Min.	0.4	0,5	5	0.64	0.61	0.42	0.36	0.51	1	–	mA
	0.5	0,10	10	1.6	1.5	1.1	0.9	1.3	2.6	–	
	1.5	0,15	15	4.2	4	2.8	2.4	3 4	6.8	–	
Output High (Source) Current, I_{OH} Min.	4.6	0,5	5	-0.64	-0.61	-0.42	-0.36	-0.51	-1	–	
	2.5	0,5	5	-2	-1.8	-1.3	-1.15	-1.6	-3.2	–	
	9.5	0,10	10	-1.6	-1.5	-1.1	-0.9	-1.3	-2.6	–	
	13.5	0,15	15	-4.2	-4	-2.8	-2.4	-3.4	-6.8	–	
Output Voltage: Low-Level, V_{OL} Max.	–	0,5	5	0.05				–	0	0.05	V
	–	0,10	10	0.05				–	0	0.05	
	–	0,15	15	0.05				–	0	0.05	
Output Voltage: High-Level, V_{OH} Min.	–	0,5	5	4.95				4.95	5	–	
	–	0,10	10	9.95				9.95	10	–	
	–	0,15	15	14.95				14.95	15	–	
Input Low Voltage, V_{IL} Max.	0.5, 4.5	–	5	1.5				—	—	1.5	V
	1, 9	–	10	3				—	—	3	
	1.5,13.5	–	15	4				—	—	4	
Input High Voltage, V_{IH} Min.	0.5, 4.5	–	5	3.5				3.5	—	—	
	1, 9	–	10	7				7	—	—	
	1.5,13.5	-	15	11				11	—	—	
Input Current I_{IN} Max.	–	0,18	18	±0.1	±0.1	±1	±1	–	$\pm 10^{-5}$	±0.1	μA

Note 1: These parameters and limits also apply to the Synchronous Preset Mode should a Preset condition of JAM Zero on J_0 to J_7 exist.

Downloaded from Datasheet.su

DYNAMIC ELECTRICAL CHARACTERISTICS at $T_A = 25°C$, $C_L = 50$ pF, Input t_r, $t_f = 20$ ns, $R_L = 200$ kΩ

Characteristic	Conditions V_{DD} (V)	Limits All Packages Min.	Typ.	Max.	Units
Propagation Delay Time (t_{PHL}, t_{PLH}): Clock-to-Output (See Fig. 6) Note 1	5	–	300	600	ns
	10	–	130	260	
	15	–	95	190	
Carry In/Counter Enable-to-Output	5	–	200	400	
	10	–	90	180	
	15	–	65	130	
Asynchronous Preset Enable-to-Output Note 1	5	–	650	1300	
	10	–	300	600	
	15	–	200	400	
$\overline{\text{Clear}}$-to-Output	5	–	375	750	
	10	–	180	360	
	15	–	100	200	
Transition Time (t_{THL}, t_{TLH})	5	–	100	200	ns
	10	–	50	100	
	15	–	40	80	
Minimum Clock Pulse Width, (t_W)	5	–	150	300	ns
	10	–	90	180	
	15	–	40	80	
Minimum $\overline{\text{CLR}}$ Pulse Width (t_W)	5	–	160	320	
	10	–	80	160	
	15	–	50	100	
Minimum $\overline{\text{APE}}$ Pulse Width (t_W)	5	–	180	360	
	10	–	80	160	
	15	–	60	120	
Minimum $\overline{\text{APE}}$ Removal Time (t_{RM})	5	–	110	220	
	10	–	50	100	
	15	–	35	70	
Minimum $\overline{\text{SPE}}$ Set-Up Time (t_{SU})	5	–	140	280	
	10	–	70	140	
	15	–	50	100	
Minimum $\overline{\text{CI/CE}}$ Setup Time (t_{SU})	5	–	250	500	
	10	–	125	250	
	15	–	75	150	
Minimum JAM Set-Up Time (t_{SU}) *(Synchronous presetting)*	5	–	100	200	
	10	–	40	80	
	15	–	30	60	
Maximum Clock Input Frequency (f_{CL}) *(See Fig. 7)*	5	0.7	1.4	–	MHz
	10	1.8	3.6	–	
	15	2.4	4.8	–	
Input Capacitance (C_{IN})		–	5	7.5	pF

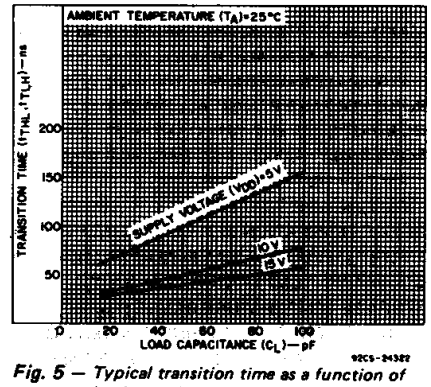

Fig. 5 — Typical transition time as a function of load capacitance.

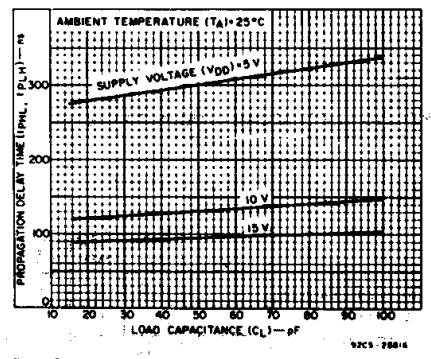

Fig. 6 — Typical propagation delay time as a function of load capacitance (clock to CO/ZD).

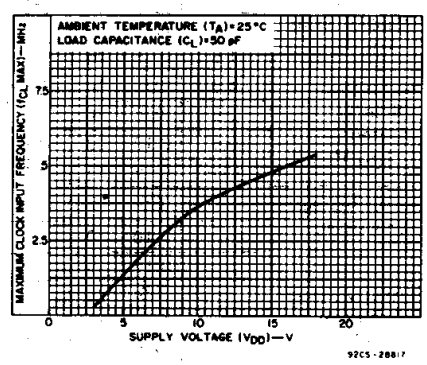

Fig. 7 — Typical maximum clock input frequency as a function of supply voltage.

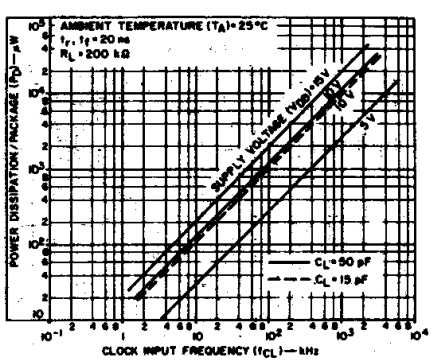

Fig. 8 — Typical dynamic power dissipation as a function of frequency.

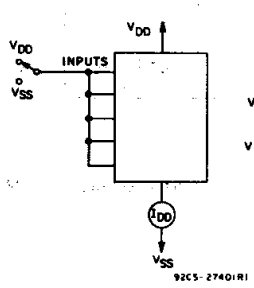

Fig. 9 — Quiescent device current test circuit.

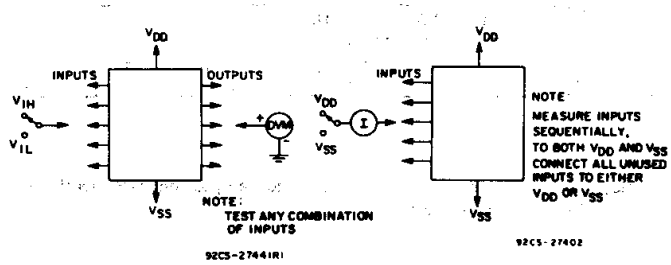

Fig. 10 — Input voltage test circuit. *Fig. 11 — Input current test circuit.*

Downloaded from Datasheet.su

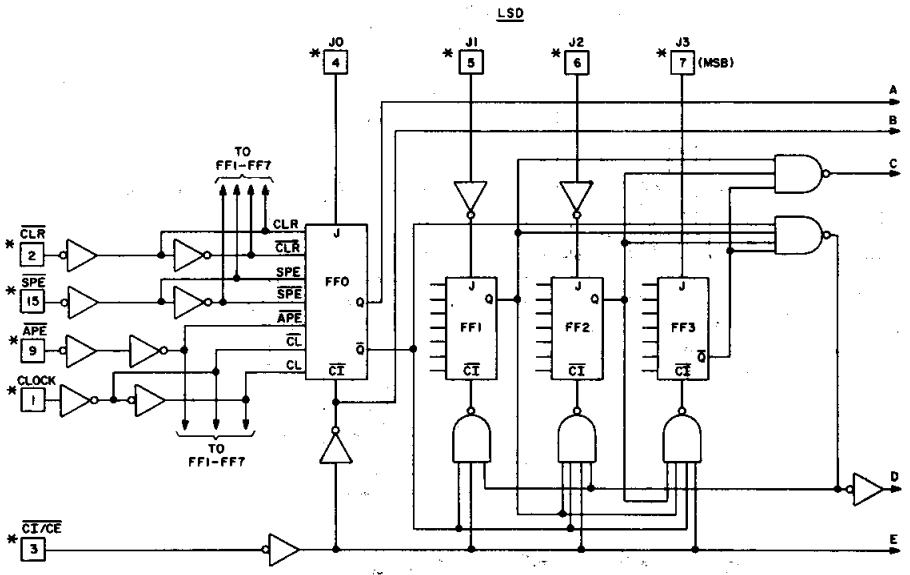

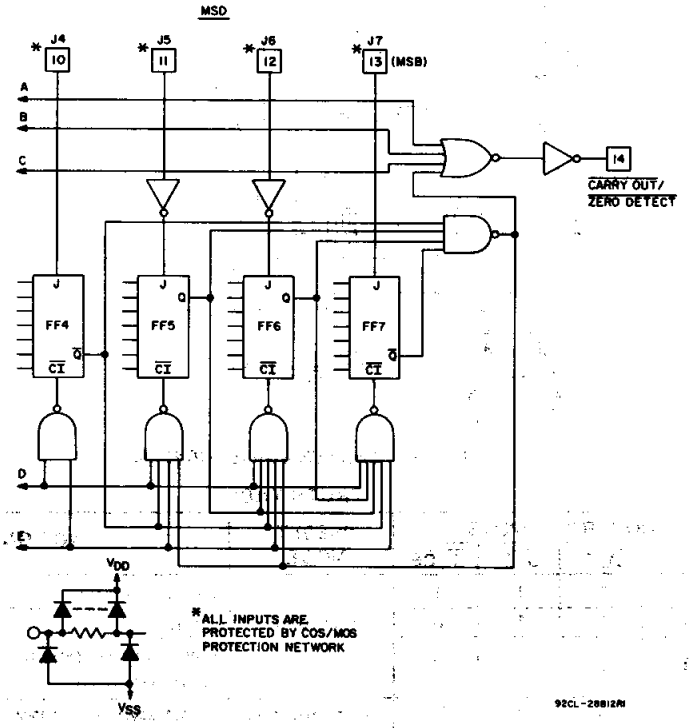

Fig. 12 – Logic diagram for CD40102B.

Downloaded from Datasheet.su

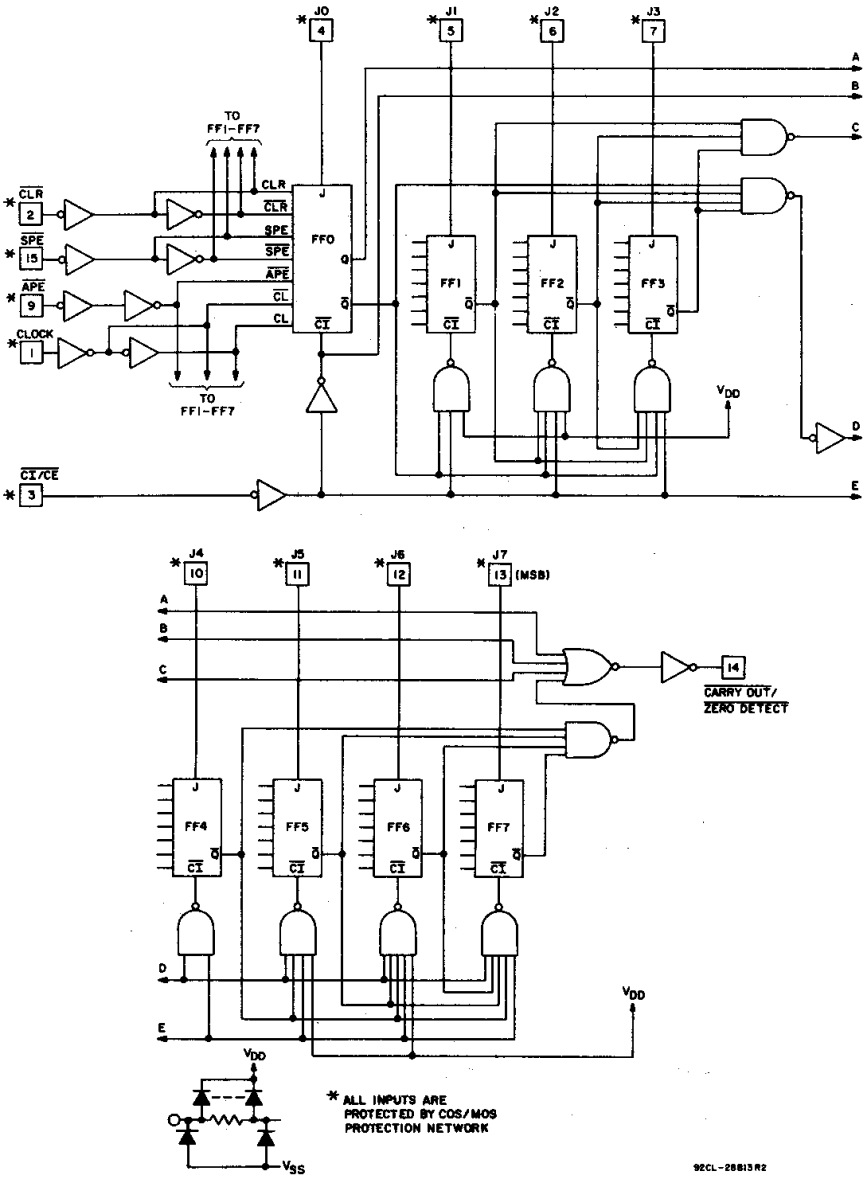

Fig. 13 — Logic diagram for CD40103B.

TRUTH TABLE

CONTROL INPUTS				PRESET MODE	ACTION
$\overline{CLR}$	$\overline{APE}$	$\overline{SPE}$	$\overline{CI/CE}$		
1	1	1	1	Synchronous	Inhibit counter
1	1	1	0		Count down*
1	1	0	X		Preset on next positive clock transition
1	0	X	X	Asynchronous	Preset asynchronously
0	X	X	X		Clear to maximum count

Notes: 1. 0 = Low level
1 = High level
X = Don't care

2. Clock connected to clock input
3. Synchronous operation: changes occur on negative-to-positive clock transitions
4. JAM inputs: CD40102B BCD; MSD = J7,J6,J5,J4 (J7 is MSB)
LSD = J3,J2,J1,J0 (J3 is MSB)
CD40103B Binary; MSB = J7, LSB = J0

*At zero count, the counters will jump to the maximum count on the next clock transition to "High."

Downloaded from Datasheet.su

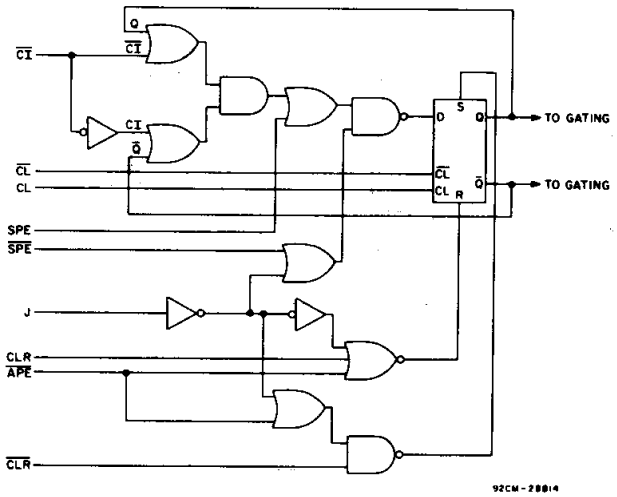

Fig. 14 — Detail logic diagram for flip-flops, FF0 – FF7, used in logic diagrams for CD40102B and CD40103B.

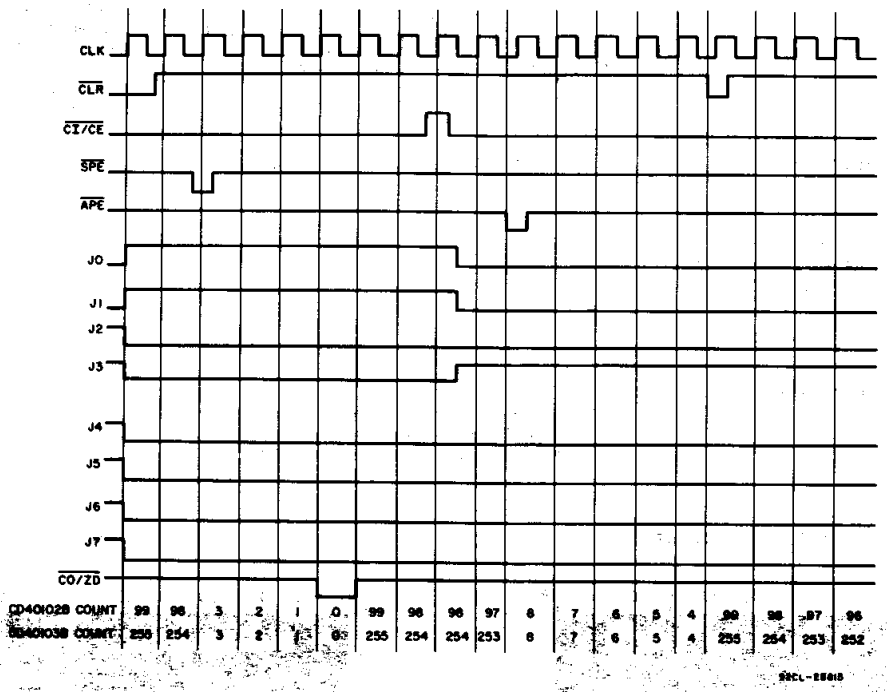

Fig. 15 — Timing diagram for CD40102B and CD40103B.

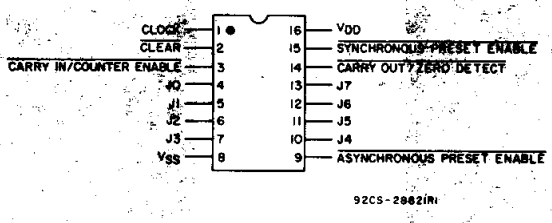

CD40102B, CD40103B

TERMINAL ASSIGNMENT

Downloaded from Datasheet.su

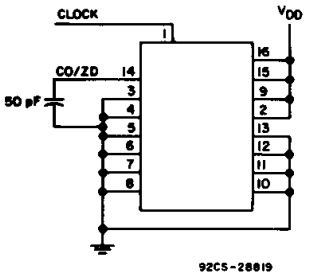

Fig.16 – Maximum clock frequency test circuit.

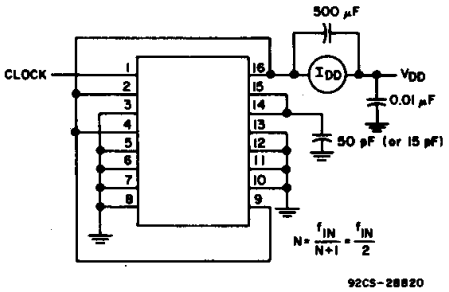

Fig.17 – Dynamic power dissipation test circuit (÷2 mode).

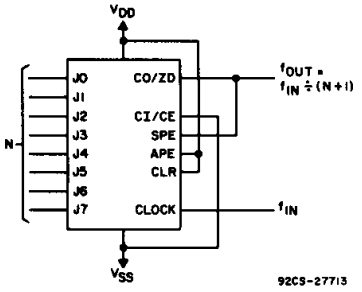

Fig.18 – Divide-by-"N" counter.

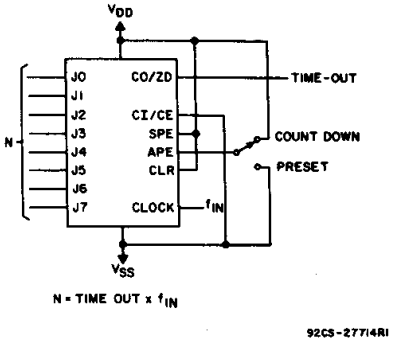

Fig.19 – Programmable timer.

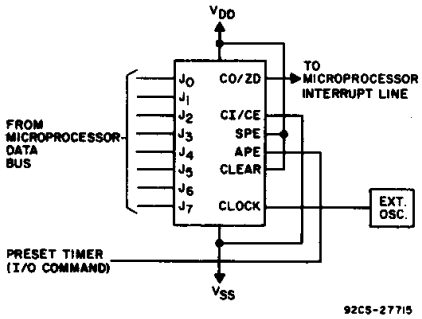

Fig.20 – Microprocessor interrupt timer.

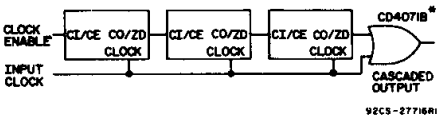

* An output spike (160 ns @ V_{DD} = 5 V) occurs whenever two or more devices are cascaded in the parallel-clocked mode because the clock-to-carry out delay is greater than the carry-in-to-carry out delay. This spike is eliminated by gating the output of the last device with the clock as shown.

Fig.21 – Synchronous cascading.

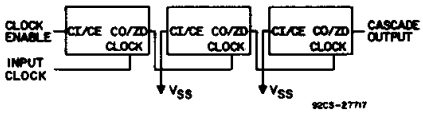

Fig.22 – Ripple cascading.

Dimensions in parentheses are in millimeters and are derived from the basic inch dimensions as indicated. Grid graduations are in mils (10^{-3} inch).

Dimensions and pad layout for CD40102B.

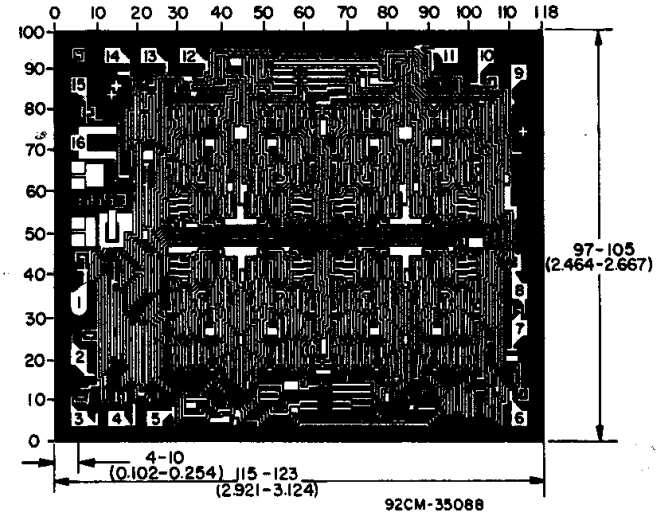

Dimensions and pad layout for CD40103B.

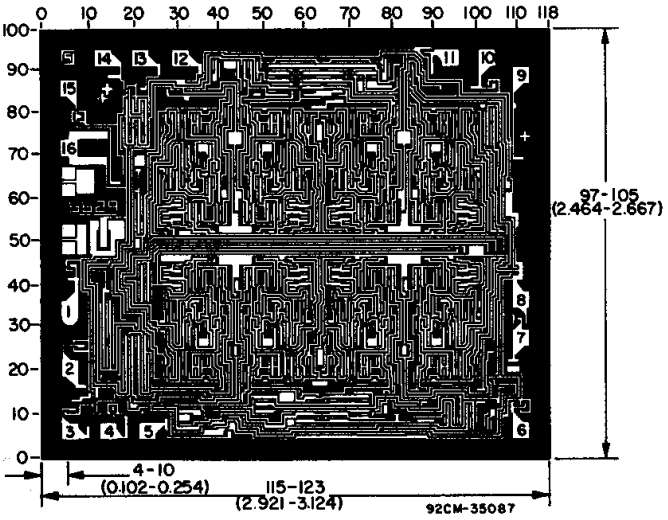

Downloaded from Datasheet.su

PACKAGING INFORMATION

Orderable Device	Status (1)	Package Type	Package Drawing	Pins	Package Qty	Eco Plan (2)	Lead/ Ball Finish	MSL Peak Temp (3)	Samples (Requires Login)
CD40102BE	ACTIVE	PDIP	N	16	25	Pb-Free (RoHS)	CU NIPDAU	N / A for Pkg Type	Contact TI Distributor or Sales Office
CD40102BEE4	ACTIVE	PDIP	N	16	25	Pb-Free (RoHS)	CU NIPDAU	N / A for Pkg Type	Contact TI Distributor or Sales Office
CD40102BNSR	ACTIVE	SO	NS	16	2000	Green (RoHS & no Sb/Br)	CU NIPDAU	Level-1-260C-UNLIM	Purchase Samples
CD40102BNSRE4	ACTIVE	SO	NS	16	2000	Green (RoHS & no Sb/Br)	CU NIPDAU	Level-1-260C-UNLIM	Purchase Samples
CD40102BNSRG4	ACTIVE	SO	NS	16	2000	Green (RoHS & no Sb/Br)	CU NIPDAU	Level-1-260C-UNLIM	Purchase Samples
CD40102BPW	ACTIVE	TSSOP	PW	16	90	Green (RoHS & no Sb/Br)	CU NIPDAU	Level-1-260C-UNLIM	Purchase Samples
CD40102BPWE4	ACTIVE	TSSOP	PW	16	90	Green (RoHS & no Sb/Br)	CU NIPDAU	Level-1-260C-UNLIM	Purchase Samples
CD40102BPWG4	ACTIVE	TSSOP	PW	16	90	Green (RoHS & no Sb/Br)	CU NIPDAU	Level-1-260C-UNLIM	Purchase Samples
CD40102BPWR	ACTIVE	TSSOP	PW	16	2000	Green (RoHS & no Sb/Br)	CU NIPDAU	Level-1-260C-UNLIM	Contact TI Distributor or Sales Office
CD40102BPWRE4	ACTIVE	TSSOP	PW	16	2000	Green (RoHS & no Sb/Br)	CU NIPDAU	Level-1-260C-UNLIM	Contact TI Distributor or Sales Office
CD40102BPWRG4	ACTIVE	TSSOP	PW	16	2000	Green (RoHS & no Sb/Br)	CU NIPDAU	Level-1-260C-UNLIM	Contact TI Distributor or Sales Office
CD40103BE	ACTIVE	PDIP	N	16	25	Pb-Free (RoHS)	CU NIPDAU	N / A for Pkg Type	Contact TI Distributor or Sales Office
CD40103BEE4	ACTIVE	PDIP	N	16	25	Pb-Free (RoHS)	CU NIPDAU	N / A for Pkg Type	Contact TI Distributor or Sales Office
CD40103BF	ACTIVE	CDIP	J	16	1	TBD	A42	N / A for Pkg Type	Purchase Samples
CD40103BF3A	ACTIVE	CDIP	J	16	1	TBD	A42	N / A for Pkg Type	Purchase Samples
CD40103BNSR	ACTIVE	SO	NS	16	2000	Green (RoHS & no Sb/Br)	CU NIPDAU	Level-1-260C-UNLIM	Purchase Samples
CD40103BNSRE4	ACTIVE	SO	NS	16	2000	Green (RoHS & no Sb/Br)	CU NIPDAU	Level-1-260C-UNLIM	Purchase Samples
CD40103BNSRG4	ACTIVE	SO	NS	16	2000	Green (RoHS & no Sb/Br)	CU NIPDAU	Level-1-260C-UNLIM	Purchase Samples

Downloaded from Datasheet.su

Orderable Device	Status [1]	Package Type	Package Drawing	Pins	Package Qty	Eco Plan [2]	Lead/ Ball Finish	MSL Peak Temp [3]	Samples (Requires Login)
CD40103BPW	ACTIVE	TSSOP	PW	16	90	Green (RoHS & no Sb/Br)	CU NIPDAU	Level-1-260C-UNLIM	Purchase Samples
CD40103BPWE4	ACTIVE	TSSOP	PW	16	90	Green (RoHS & no Sb/Br)	CU NIPDAU	Level-1-260C-UNLIM	Purchase Samples
CD40103BPWG4	ACTIVE	TSSOP	PW	16	90	Green (RoHS & no Sb/Br)	CU NIPDAU	Level-1-260C-UNLIM	Purchase Samples

[1] The marketing status values are defined as follows:
ACTIVE: Product device recommended for new designs.
LIFEBUY: TI has announced that the device will be discontinued, and a lifetime-buy period is in effect.
NRND: Not recommended for new designs. Device is in production to support existing customers, but TI does not recommend using this part in a new design.
PREVIEW: Device has been announced but is not in production. Samples may or may not be available.
OBSOLETE: TI has discontinued the production of the device.

[2] Eco Plan - The planned eco-friendly classification: Pb-Free (RoHS), Pb-Free (RoHS Exempt), or Green (RoHS & no Sb/Br) - please check http://www.ti.com/productcontent for the latest availability information and additional product content details.
TBD: The Pb-Free/Green conversion plan has not been defined.
Pb-Free (RoHS): TI's terms "Lead-Free" or "Pb-Free" mean semiconductor products that are compatible with the current RoHS requirements for all 6 substances, including the requirement that lead not exceed 0.1% by weight in homogeneous materials. Where designed to be soldered at high temperatures, TI Pb-Free products are suitable for use in specified lead-free processes.
Pb-Free (RoHS Exempt): This component has a RoHS exemption for either 1) lead-based flip-chip solder bumps used between the die and package, or 2) lead-based die adhesive used between the die and leadframe. The component is otherwise considered Pb-Free (RoHS compatible) as defined above.
Green (RoHS & no Sb/Br): TI defines "Green" to mean Pb-Free (RoHS compatible), and free of Bromine (Br) and Antimony (Sb) based flame retardants (Br or Sb do not exceed 0.1% by weight in homogeneous material)

[3] MSL, Peak Temp. -- The Moisture Sensitivity Level rating according to the JEDEC industry standard classifications, and peak solder temperature.

Important Information and Disclaimer: The information provided on this page represents TI's knowledge and belief as of the date that it is provided. TI bases its knowledge and belief on information provided by third parties, and makes no representation or warranty as to the accuracy of such information. Efforts are underway to better integrate information from third parties. TI has taken and continues to take reasonable steps to provide representative and accurate information but may not have conducted destructive testing or chemical analysis on incoming materials and chemicals. TI and TI suppliers consider certain information to be proprietary, and thus CAS numbers and other limited information may not be available for release.

In no event shall TI's liability arising out of such information exceed the total purchase price of the TI part(s) at issue in this document sold by TI to Customer on an annual basis.

OTHER QUALIFIED VERSIONS OF CD40103B, CD40103B-MIL :

- Catalog: CD40103B
- Military: CD40103B-MIL

Downloaded from Datasheet.su

NOTE: Qualified Version Definitions:

- Catalog - TI's standard catalog product
- Military - QML certified for Military and Defense Applications

Downloaded from Datasheet.su

TAPE AND REEL INFORMATION

REEL DIMENSIONS

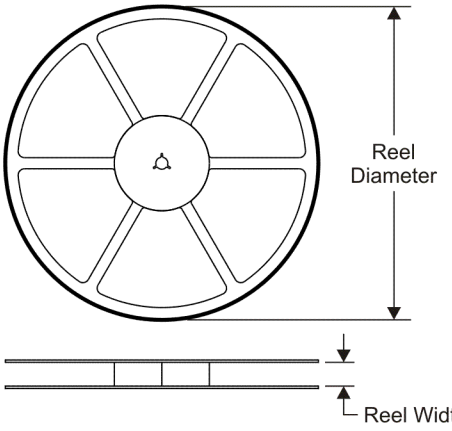

TAPE DIMENSIONS

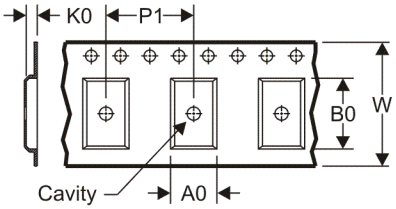

A0	Dimension designed to accommodate the component width
B0	Dimension designed to accommodate the component length
K0	Dimension designed to accommodate the component thickness
W	Overall width of the carrier tape
P1	Pitch between successive cavity centers

QUADRANT ASSIGNMENTS FOR PIN 1 ORIENTATION IN TAPE

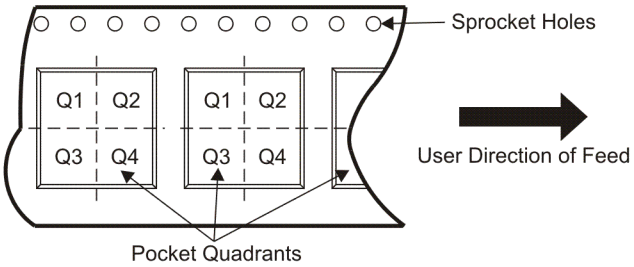

*All dimensions are nominal

Device	Package Type	Package Drawing	Pins	SPQ	Reel Diameter (mm)	Reel Width W1 (mm)	A0 (mm)	B0 (mm)	K0 (mm)	P1 (mm)	W (mm)	Pin1 Quadrant
CD40102BNSR	SO	NS	16	2000	330.0	16.4	8.2	10.5	2.5	12.0	16.0	Q1
CD40102BPWR	TSSOP	PW	16	2000	330.0	12.4	6.9	5.6	1.6	8.0	12.0	Q1
CD40103BNSR	SO	NS	16	2000	330.0	16.4	8.2	10.5	2.5	12.0	16.0	Q1

Downloaded from Datasheet.su

TAPE AND REEL BOX DIMENSIONS

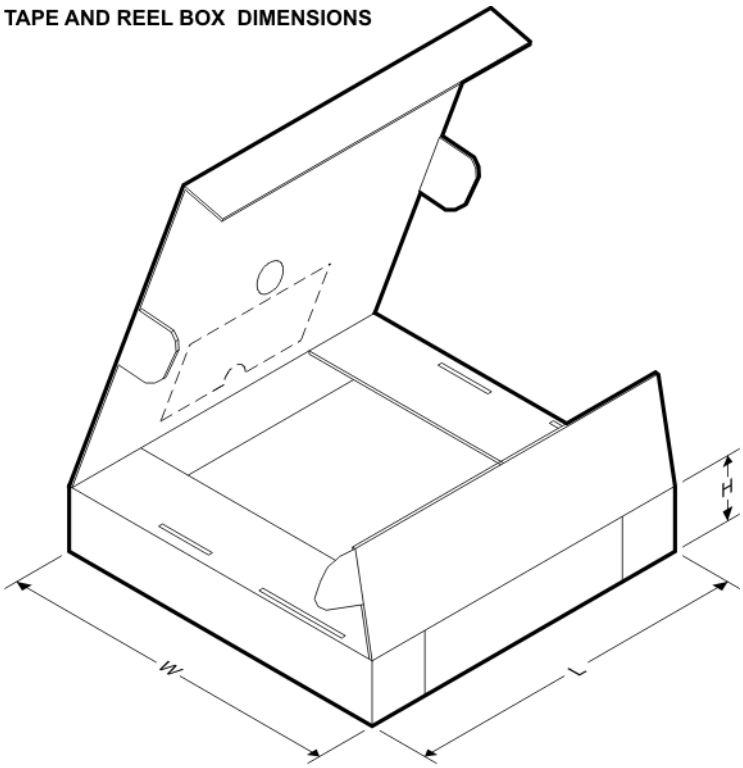

*All dimensions are nominal

Device	Package Type	Package Drawing	Pins	SPQ	Length (mm)	Width (mm)	Height (mm)
CD40102BNSR	SO	NS	16	2000	346.0	346.0	33.0
CD40102BPWR	TSSOP	PW	16	2000	346.0	346.0	29.0
CD40103BNSR	SO	NS	16	2000	346.0	346.0	33.0

Downloaded from Datasheet.su

J (R–GDIP–T**) CERAMIC DUAL IN–LINE PACKAGE

14 LEADS SHOWN

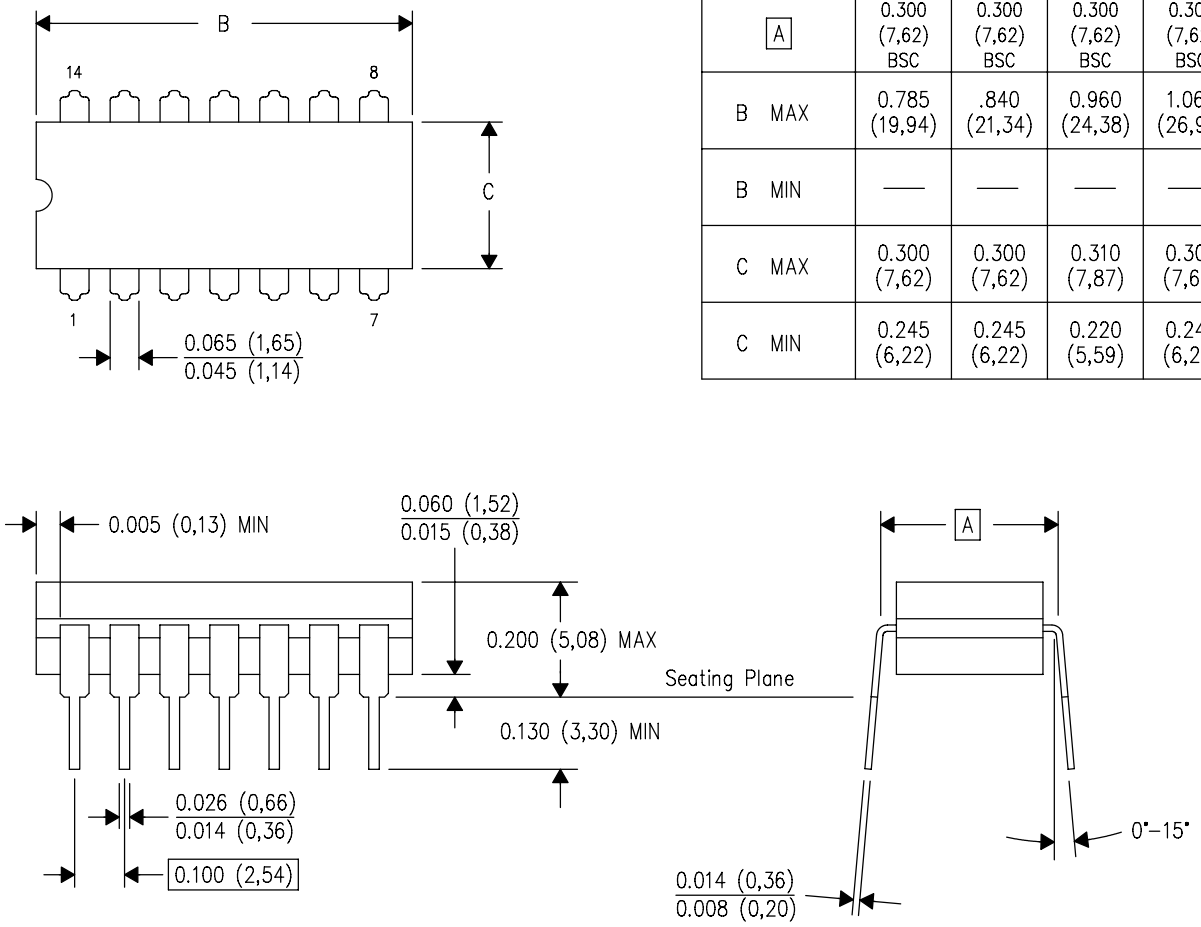

DIM \ PINS **	14	16	18	20
A	0.300 (7,62) BSC	0.300 (7,62) BSC	0.300 (7,62) BSC	0.300 (7,62) BSC
B MAX	0.785 (19,94)	.840 (21,34)	0.960 (24,38)	1.060 (26,92)
B MIN	—	—	—	—
C MAX	0.300 (7,62)	0.300 (7,62)	0.310 (7,87)	0.300 (7,62)
C MIN	0.245 (6,22)	0.245 (6,22)	0.220 (5,59)	0.245 (6,22)

4040083/F 03/03

NOTES:
A. All linear dimensions are in inches (millimeters).
B. This drawing is subject to change without notice.
C. This package is hermetically sealed with a ceramic lid using glass frit.
D. Index point is provided on cap for terminal identification only on press ceramic glass frit seal only.
E. Falls within MIL STD 1835 GDIP1–T14, GDIP1–T16, GDIP1–T18 and GDIP1–T20.

Downloaded from Datasheet.su

N (R–PDIP–T**) PLASTIC DUAL–IN–LINE PACKAGE

16 PINS SHOWN

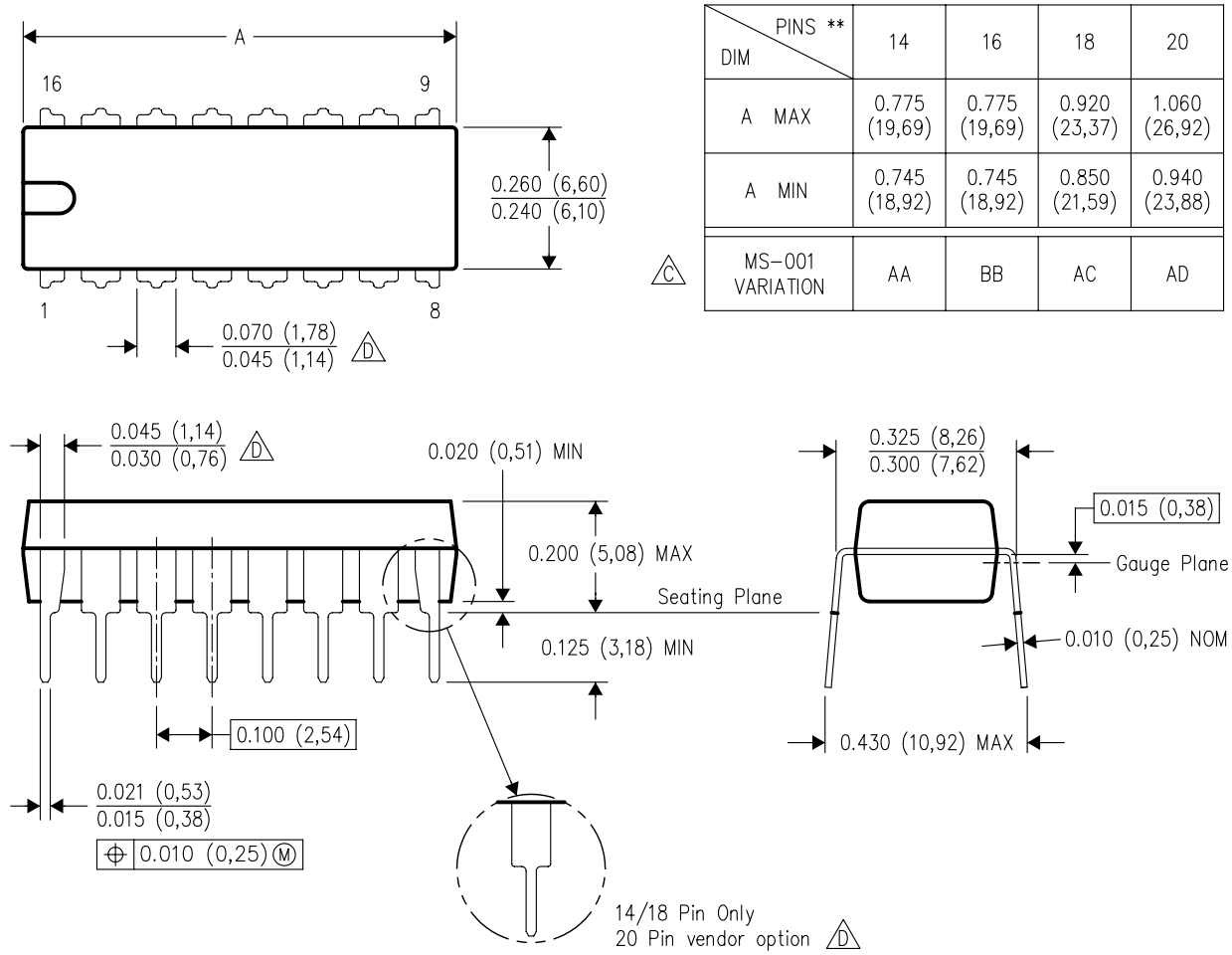

DIM \ PINS **	14	16	18	20
A MAX	0.775 (19,69)	0.775 (19,69)	0.920 (23,37)	1.060 (26,92)
A MIN	0.745 (18,92)	0.745 (18,92)	0.850 (21,59)	0.940 (23,88)
MS–001 VARIATION (C)	AA	BB	AC	AD

NOTES:
A. All linear dimensions are in inches (millimeters).
B. This drawing is subject to change without notice.
C. Falls within JEDEC MS–001, except 18 and 20 pin minimum body length (Dim A).
D. The 20 pin end lead shoulder width is a vendor option, either half or full width.

Downloaded from Datasheet.su

PW (R-PDSO-G16) PLASTIC SMALL OUTLINE

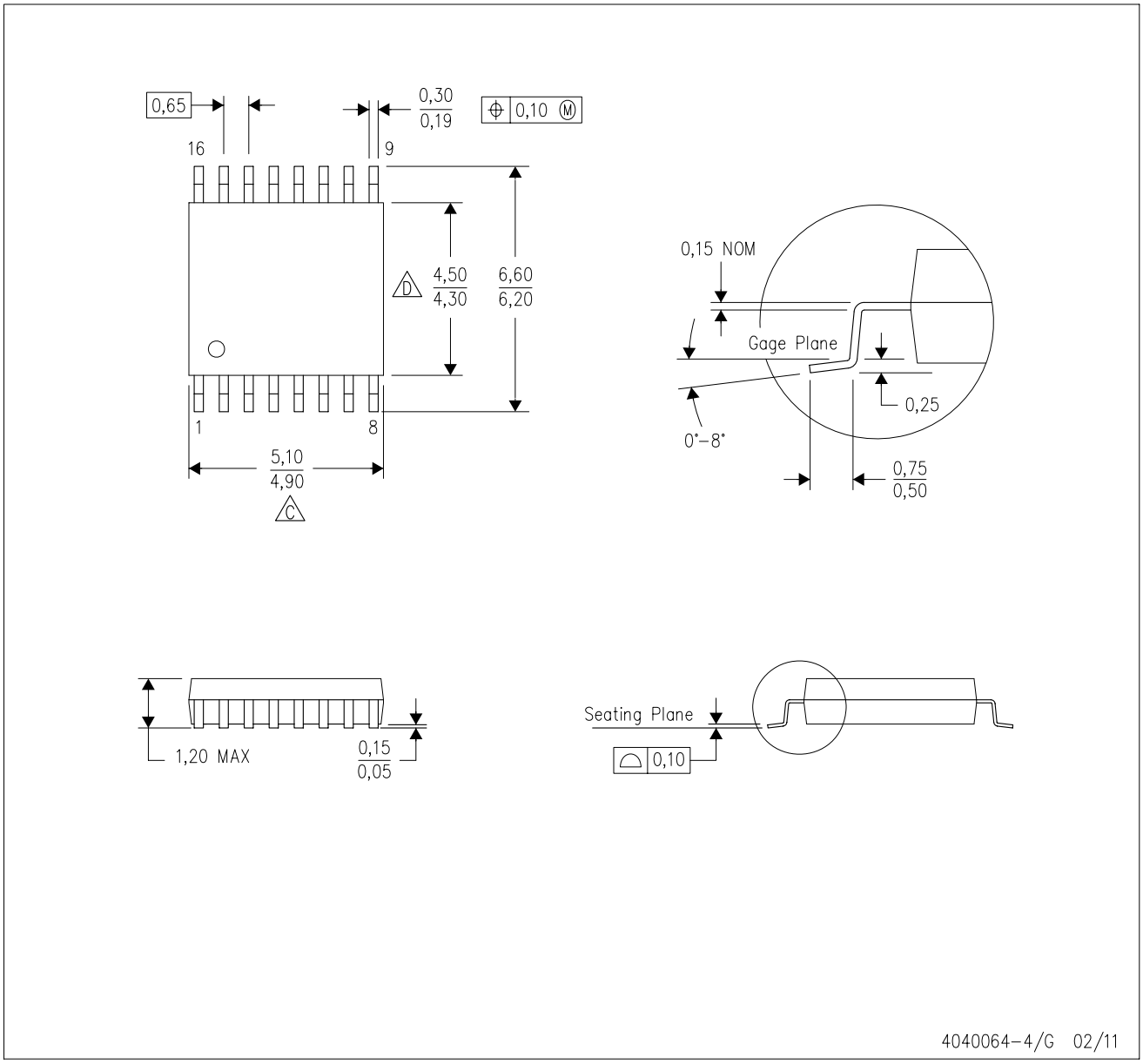

NOTES:
A. All linear dimensions are in millimeters. Dimensioning and tolerancing per ASME Y14.5M-1994.
B. This drawing is subject to change without notice.
C. Body length does not include mold flash, protrusions, or gate burrs. Mold flash, protrusions, or gate burrs shall not exceed 0,15 each side.
D. Body width does not include interlead flash. Interlead flash shall not exceed 0,25 each side.
E. Falls within JEDEC MO-153

Downloaded from Datasheet.su

PW (R–PDSO–G16) PLASTIC SMALL OUTLINE

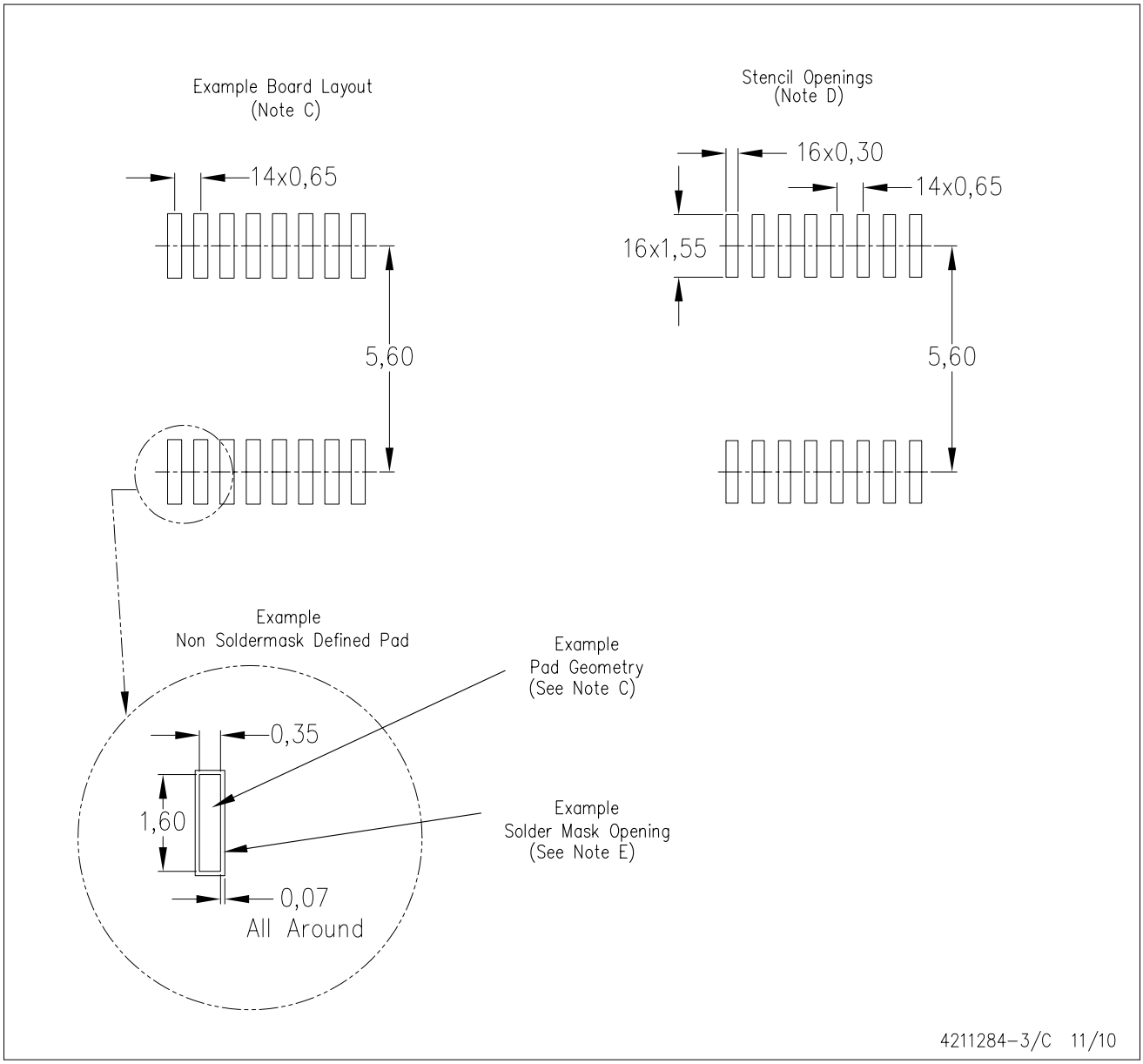

NOTES:
A. All linear dimensions are in millimeters.
B. This drawing is subject to change without notice.
C. Publication IPC–7351 is recommended for alternate designs.
D. Laser cutting apertures with trapezoidal walls and also rounding corners will offer better paste release. Customers should contact their board assembly site for stencil design recommendations. Refer to IPC–7525 for other stencil recommendations.
E. Customers should contact their board fabrication site for solder mask tolerances between and around signal pads.

Downloaded from Datasheet.su

MECHANICAL DATA

NS (R-PDSO-G)** **PLASTIC SMALL-OUTLINE PACKAGE**

14-PINS SHOWN

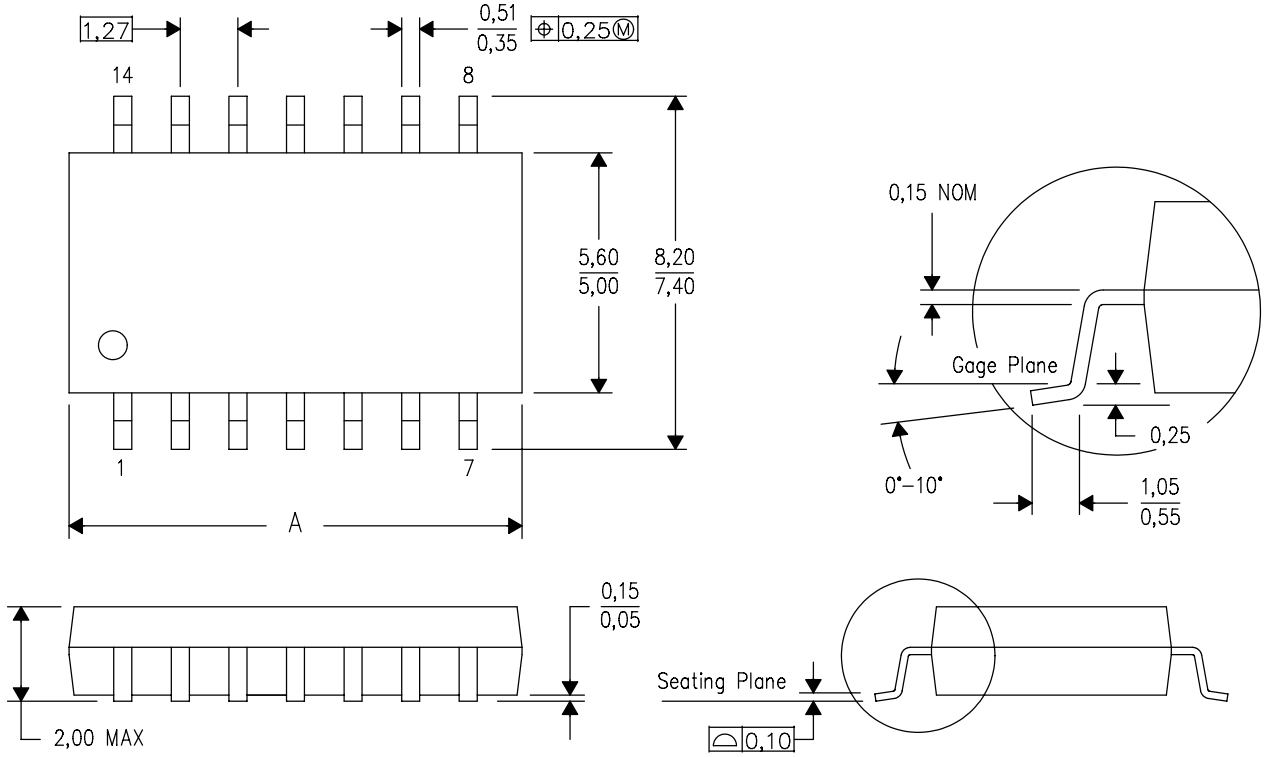

DIM \ PINS **	14	16	20	24
A MAX	10,50	10,50	12,90	15,30
A MIN	9,90	9,90	12,30	14,70

4040062/C 03/03

NOTES:
A. All linear dimensions are in millimeters.
B. This drawing is subject to change without notice.
C. Body dimensions do not include mold flash or protrusion, not to exceed 0,15.

Downloaded from Datasheet.su

IMPORTANT NOTICE

Texas Instruments Incorporated and its subsidiaries (TI) reserve the right to make corrections, modifications, enhancements, improvements, and other changes to its products and services at any time and to discontinue any product or service without notice. Customers should obtain the latest relevant information before placing orders and should verify that such information is current and complete. All products are sold subject to TI's terms and conditions of sale supplied at the time of order acknowledgment.

TI warrants performance of its hardware products to the specifications applicable at the time of sale in accordance with TI's standard warranty. Testing and other quality control techniques are used to the extent TI deems necessary to support this warranty. Except where mandated by government requirements, testing of all parameters of each product is not necessarily performed.

TI assumes no liability for applications assistance or customer product design. Customers are responsible for their products and applications using TI components. To minimize the risks associated with customer products and applications, customers should provide adequate design and operating safeguards.

TI does not warrant or represent that any license, either express or implied, is granted under any TI patent right, copyright, mask work right, or other TI intellectual property right relating to any combination, machine, or process in which TI products or services are used. Information published by TI regarding third-party products or services does not constitute a license from TI to use such products or services or a warranty or endorsement thereof. Use of such information may require a license from a third party under the patents or other intellectual property of the third party, or a license from TI under the patents or other intellectual property of TI.

Reproduction of TI information in TI data books or data sheets is permissible only if reproduction is without alteration and is accompanied by all associated warranties, conditions, limitations, and notices. Reproduction of this information with alteration is an unfair and deceptive business practice. TI is not responsible or liable for such altered documentation. Information of third parties may be subject to additional restrictions.

Resale of TI products or services with statements different from or beyond the parameters stated by TI for that product or service voids all express and any implied warranties for the associated TI product or service and is an unfair and deceptive business practice. TI is not responsible or liable for any such statements.

TI products are not authorized for use in safety-critical applications (such as life support) where a failure of the TI product would reasonably be expected to cause severe personal injury or death, unless officers of the parties have executed an agreement specifically governing such use. Buyers represent that they have all necessary expertise in the safety and regulatory ramifications of their applications, and acknowledge and agree that they are solely responsible for all legal, regulatory and safety-related requirements concerning their products and any use of TI products in such safety-critical applications, notwithstanding any applications-related information or support that may be provided by TI. Further, Buyers must fully indemnify TI and its representatives against any damages arising out of the use of TI products in such safety-critical applications.

TI products are neither designed nor intended for use in military/aerospace applications or environments unless the TI products are specifically designated by TI as military-grade or "enhanced plastic." Only products designated by TI as military-grade meet military specifications. Buyers acknowledge and agree that any such use of TI products which TI has not designated as military-grade is solely at the Buyer's risk, and that they are solely responsible for compliance with all legal and regulatory requirements in connection with such use.

TI products are neither designed nor intended for use in automotive applications or environments unless the specific TI products are designated by TI as compliant with ISO/TS 16949 requirements. Buyers acknowledge and agree that, if they use any non-designated products in automotive applications, TI will not be responsible for any failure to meet such requirements.

Following are URLs where you can obtain information on other Texas Instruments products and application solutions:

Products		**Applications**	
Audio	www.ti.com/audio	Communications and Telecom	www.ti.com/communications
Amplifiers	amplifier.ti.com	Computers and Peripherals	www.ti.com/computers
Data Converters	dataconverter.ti.com	Consumer Electronics	www.ti.com/consumer-apps
DLP® Products	www.dlp.com	Energy and Lighting	www.ti.com/energy
DSP	dsp.ti.com	Industrial	www.ti.com/industrial
Clocks and Timers	www.ti.com/clocks	Medical	www.ti.com/medical
Interface	interface.ti.com	Security	www.ti.com/security
Logic	logic.ti.com	Space, Avionics and Defense	www.ti.com/space-avionics-defense
Power Mgmt	power.ti.com	Transportation and Automotive	www.ti.com/automotive
Microcontrollers	microcontroller.ti.com	Video and Imaging	www.ti.com/video
RFID	www.ti-rfid.com	Wireless	www.ti.com/wireless-apps
RF/IF and ZigBee® Solutions	www.ti.com/lprf		

TI E2E Community Home Page e2e.ti.com

Mailing Address: Texas Instruments, Post Office Box 655303, Dallas, Texas 75265
Copyright © 2011, Texas Instruments Incorporated

Downloaded from Datasheet.su