DPS5
Power Supply/Charger

Rev. DSDPS5_01212013

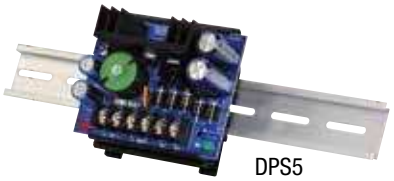
DPS5

Overview

DPS5 converts a low voltage AC input into 6VDC, 12VDC or 24VDC output. These general purpose power supplies have a wide range of applications for access control, security and CCTV system accessories that require additional power.

Specifications

Input:

- [illegible]
  24VDC output use T2428100.

Output:

- [illegible]
- [illegible]
- [illegible]
- [illegible]

Battery Backup:

- [illegible]
- [illegible]
  when AC fails.
- [illegible]
- [illegible]

Visual Indicators:

- [illegible]

Electrical:

- [illegible]
- [illegible]
  - [illegible]
  - [illegible]
  - [illegible]
- [illegible]

Features:

- [illegible]
- [illegible]
- [illegible]

Mechanical:

- [illegible]
- [illegible]
- [illegible]

Board Dimensions *(L x W x H) (approximate)*:

[illegible]

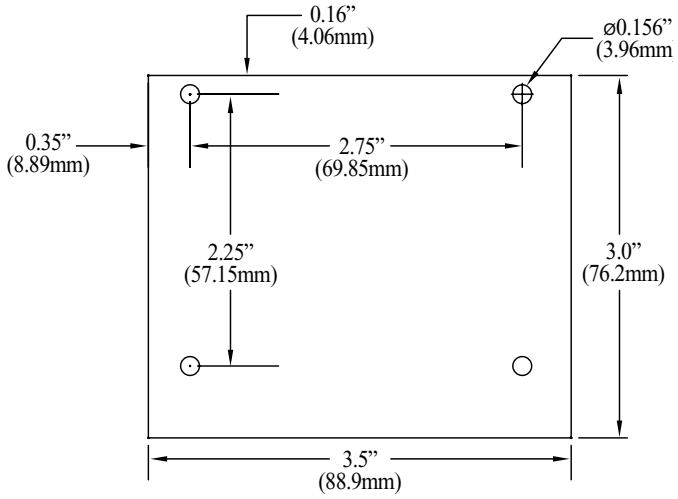

ST3 Mechanical Drawing

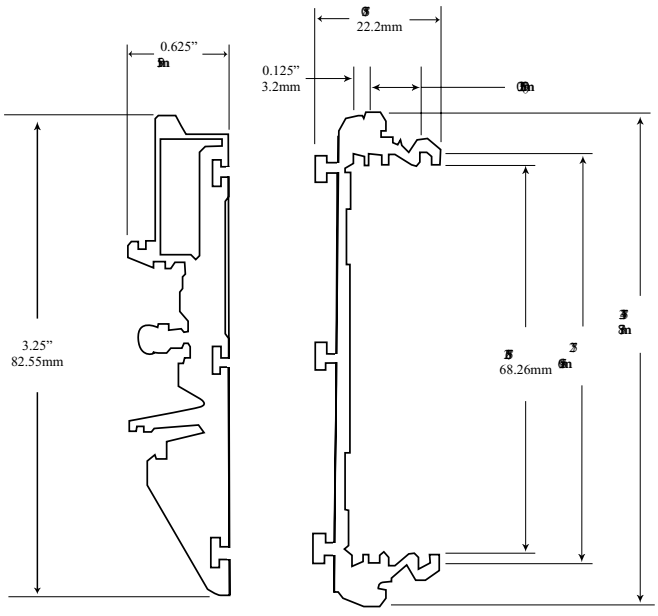

[illegible]

Downloaded from Datasheet.su